PRODUCT INFORMATION

LINEA

5941UAP150P52 ral7001

EAN 4031582411676

BETTER MOBILITY. BETTER LIFE.



Image may differ from the original product

PERFORMANCE

Roll Performance	●●●●●
Movement Noise	●●●●○
Attrition	●●●●○
Corrosion Resistance	●●●●○

CORE ATTRIBUTES

Product Name	Linea
Type	Swivel castor with directional lock
Standard	EN12530 - Devices Castors
Load capacity at 3 km/h	110 kg
Electric Conductive	No
Stainless	No
Load capacity Static	220 kg
Temperature range (Minimum)	-20 °C
Temperature range (Maximum)	60 °C
Overall Height	170 mm
Overall width	89 mm
Overall weight	1.25 kg

HOUSING

Housing Material	Polyamide
Fork shape	Twin wheel housing
Swivel Bearing	Precision ball bearing
Housing Color	Silver grey (RAL7001)
Offset	52 mm
Swivel radius	156 mm
Swivel interference	312 mm
Dome diameter	56 mm

WHEEL

Body material	Polyamide
Tread Material Mix	Polyurethane, injected
Bearing	Precision ball bearing
Threadguards	With threadguard
Diameter	150 mm
Tread width	22 mm
Hardness of tread (A)	92 Shore A

FITTING

Fitting type	Rectangular plate, US-bolt hole spacing
Plate length	90 mm
Plate width	75 mm
Plate hole length (Minimum)	72 mm
Plate hole length (Maximum)	76 mm
Plate hole width (Minimum)	44.5 mm
Plate hole width (Maximum)	52 mm
Plate hole diameter	11 mm

Deutscher Designer Club

Interzum Award

IF Design Award

© Copyright 2026 TENTE International GmbH

LINEA

5941UAP150P52 ral7001

EAN 4031582411676

BETTER MOBILITY. BETTER LIFE.

Product Drawings

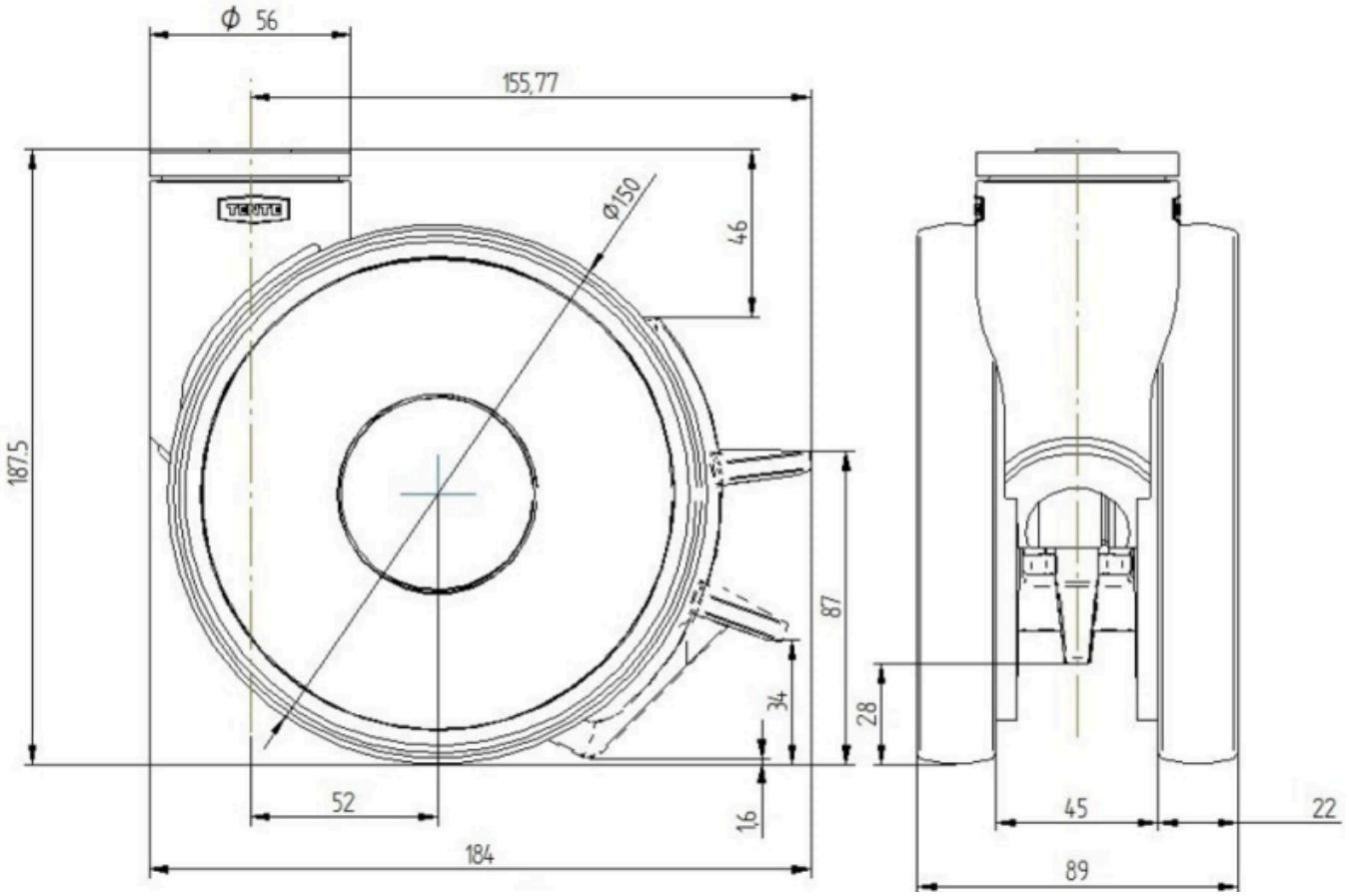

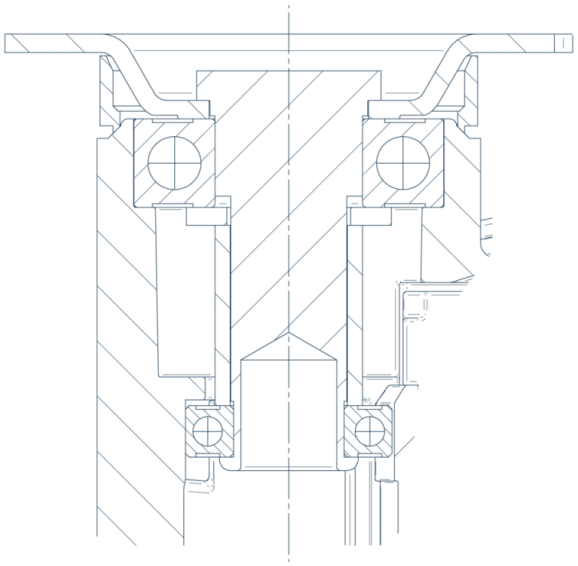

Deutscher Designer Club

Interzum Award

IF Design Award

© Copyright 2026 TENTE International GmbH