PRODUCT INFORMATION

ELASTECH

JFC125x32-Ø8

EAN 4031582319941

BETTER MOBILITY. BETTER LIFE.



Image may differ from the original product

WHEEL

Tread hardness	soft
Body material	Zinc die-cast
Tread Material Mix	Elastic tire, non-marking, vulcanized
Bearing	Precision ball bearing, stainless
Threadguards	With threadguard
Diameter	125 mm
Tread width	32 mm
Axle Hole Diameter	8 mm
Hub Length	35.5 mm
Hardness of tread (A)	75 Shore A

PERFORMANCE

Roll Performance	●●●○○
Movement Noise	●●●○○
Attrition	●●●○○
Corrosion Resistance	●●●○○

CORE ATTRIBUTES

Product Name	Elastech
Type	Wheel
Standard	EN12530 - Devices Castors
Load capacity at 3 km/h	150 kg
Electric Conductive	No
Stainless	No
Load capacity Static	300 kg
Temperature range (Minimum)	-20 °C
Temperature range (Maximum)	85 °C
Overall weight	0.68 kg

© Copyright 2026 TENTE International GmbH

ELASTECH

JFC125x32-Ø8

EAN 4031582319941

Order number 00024549

Product Drawings

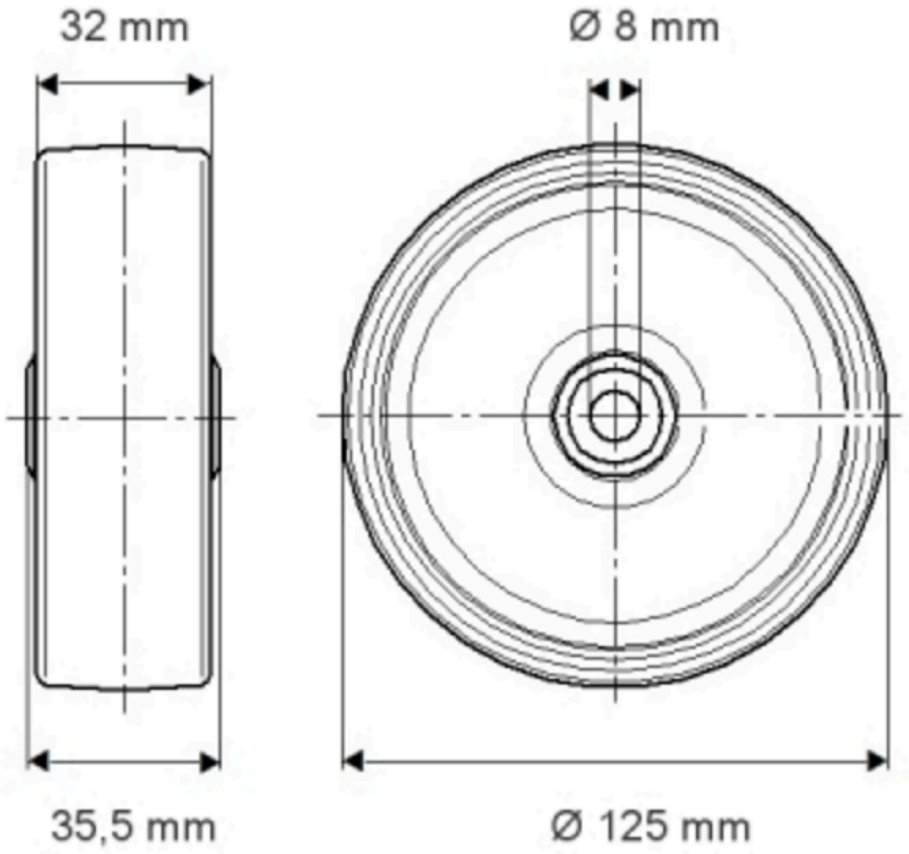

© Copyright 2026 TENTE International GmbH