PRODUCT INFORMATION

PURETECH

FVP 250x80-Ø30 HL90

EAN 4031582365429



Image may differ from the original product

WHEEL

Tread hardness	soft
Body material	Cast iron
Tread Material Mix	Solid rubber, black
Bearing	Precision ball bearing
Wheel Color	Jet black (similar RAL9005)
Threadguards	With threadguard
Diameter	250 mm
Tread width	80 mm
Axle Hole Diameter	30 mm
Hub Length	90 mm
Body width	80 mm
Hardness of tread (A)	67 Shore A

PERFORMANCE

Roll Performance	●●○○○
Movement Noise	●●●●●
Attrition	●●●○○
Corrosion Resistance	●●●○○

CORE ATTRIBUTES

Product Name	Puretech
Type	Wheel
Standard	EN12533 - Heavy Duty Castors
Load capacity at 4 km/h	810 kg
Load capacity at 6 km/h	675 kg
Electric Conductive	No
Stainless	No
Load capacity Static	1350 kg
Temperature range (Minimum)	-20 °C
Temperature range (Maximum)	80 °C
Overall weight	6.9 kg

© Copyright 2026 TENTE International GmbH

PURETECH

FVP 250x80-Ø30 HL90

EAN 4031582365429

Order number 00836533

Product Drawings

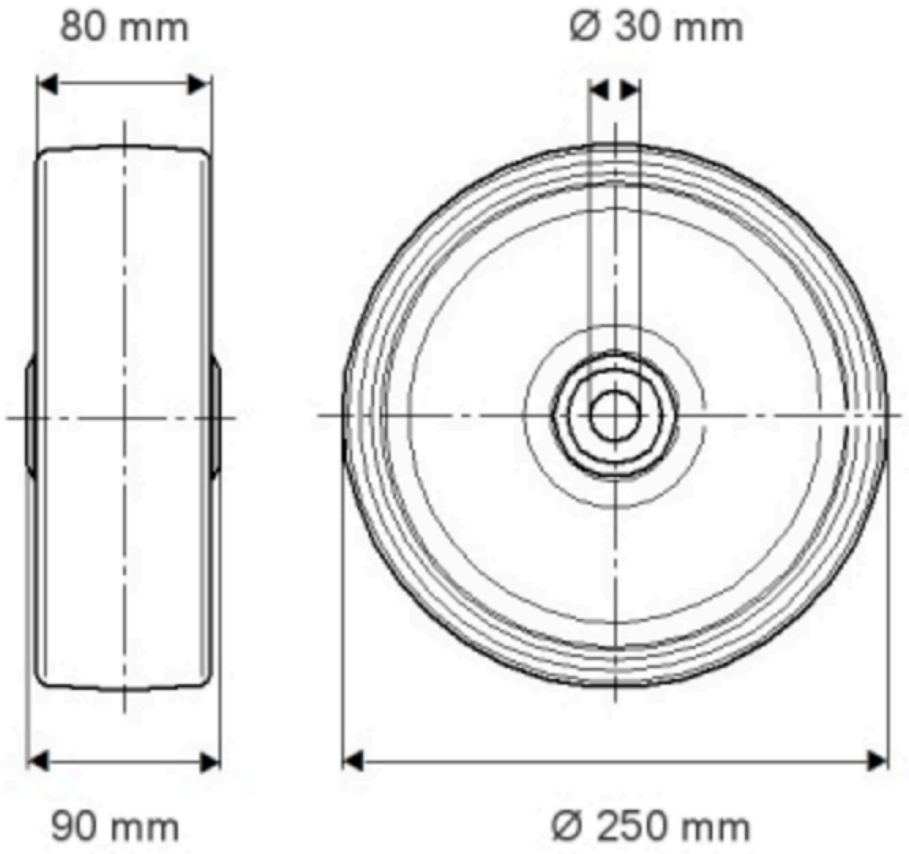

© Copyright 2026 TENTE International GmbH

PURETECH

FVP 250x80-Ø30 HL90

EAN 4031582365429

Order number 00830533

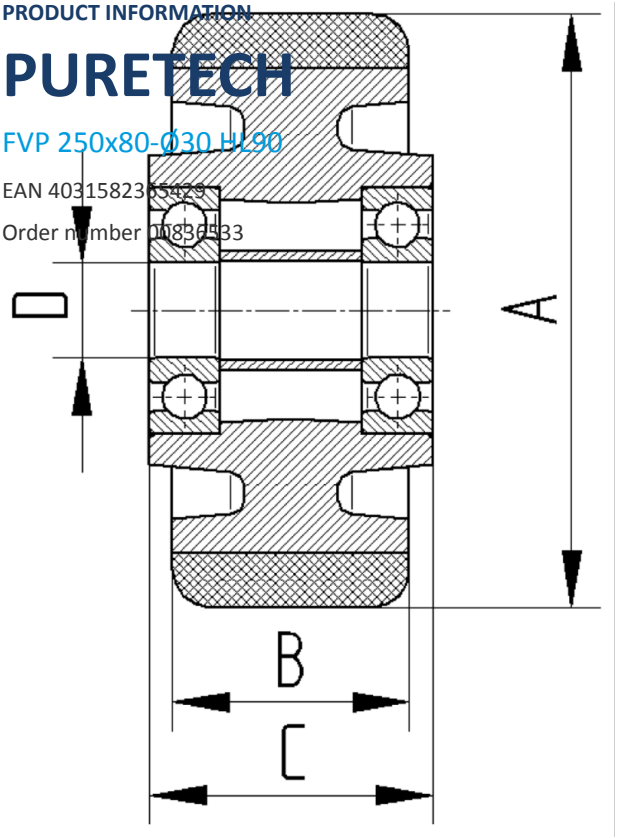

BETTER MOBILITY. BETTER LIFE.

© Copyright 2026 TENTE International GmbH