PRODUCT INFORMATION

INTEGRAL TWIN

2940UAP150R05-28 9002

EAN 4031582302509
Order number 00032990

BETTER MOBILITY. BETTER LIFE.

Image may differ from the original product

PERFORMANCE

Roll performance	●●●●●
Movement noise	●●●○○
Attrition	●●●●○
Corrosion resistance	●●●○○

CORE ATTRIBUTES

Product name	Integral twin
Type	Swivel castor
Standard	EN12531 - Hospital Bed Castors
Load capacity at 3 km/h	150 kg
Load capacity at 4 km/h	150 kg
Load capacity Static	450 kg
Temperature range (Minimum)	-25 °C
Temperature range (Maximum)	80 °C
Overall height	175 mm
Overall width	75 mm
Overall weight	1.003 kg
Certification	Tested and monitored by TÜV Süd

WHEEL

Body material	Polyamide
Tread material	Polyurethane, injected
Bearing	Precision ball bearing
Wheel color	Grey white (RAL9002)
Threadguards	With threadguard
Diameter	150 mm
Tread width	15 mm
Body width	15 mm
Hardness of tread (A)	92 Shore A
Hardness of tread (D)	42 Shore D

HOUSING

Material fork	Steel sheet, medium
Fork shape	Twin wheel housing
Swivel bearing	Precision ball bearing
Colour	Grey white (RAL9002)
Offset	45 mm
Swivel radius	124 mm
Swivel interference	248 mm
Dome diameter	70 mm

FITTING

Fitting type	Solid stem, round
Bolt diameter	28 mm
Bolt length	45 mm
Bolt thread position	19 mm
Bolt mounting holes quantity	2

German Design Award

Red Dot Design Award

INTEGRAL TWIN

2940UAP150R05-28 9002

EAN 4031582302509
Order number 00032990

BETTER MOBILITY. BETTER LIFE.

TECHNICAL DRAWINGS

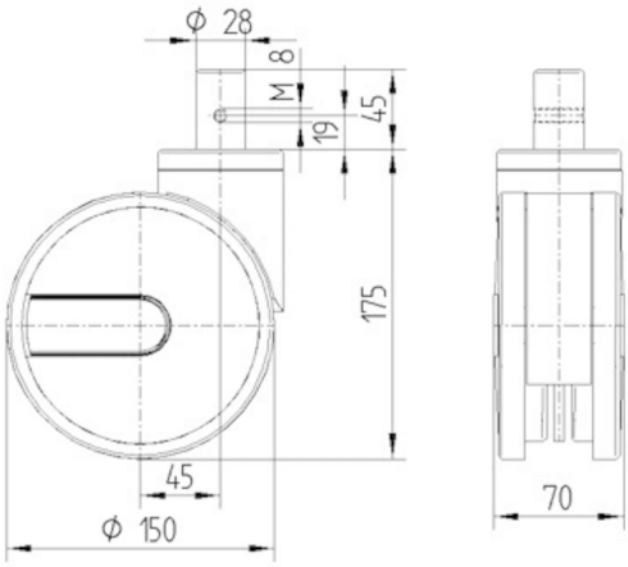

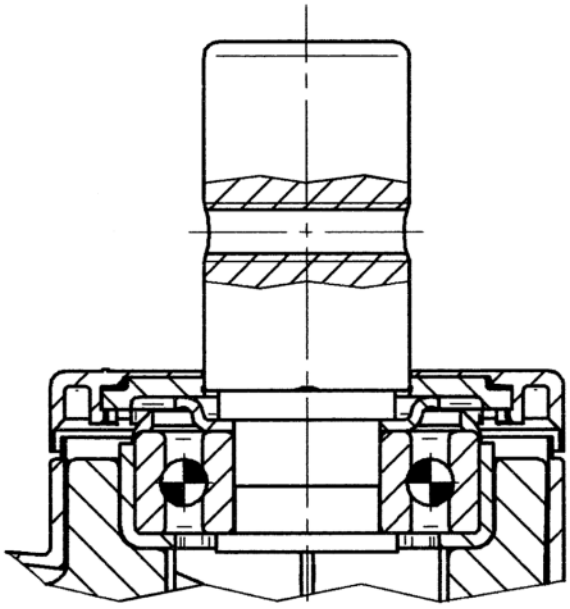

German Design Award

Red Dot Design Award

© Copyright 2026 TENTE International GmbH