PRODUCT INFORMATION

LUMINA

A520YGI050B10-11x20 DOM45

EAN 4031582341751

BETTER MOBILITY. BETTER LIFE.



Image may differ from the original product

PERFORMANCE

Roll Performance	●●●○○
Movement Noise	●●●○○
Attrition	●●●○○
Corrosion Resistance	●●●○○

CORE ATTRIBUTES

Product Name	Lumina
Type	Swivel castor
Electric Conductive	Yes
Stainless	No
Temperature range (Minimum)	-10 °C
Temperature range (Maximum)	40 °C
Overall Height	61 mm
Overall width	55 mm
Overall weight	0.11 kg

HOUSING

Housing Material	Polypropylene
Fork shape	Twin wheel housing, closed, with dome
Swivel Bearing	Stem, swiveling
Swivel radius	51 mm
Swivel interference	102 mm
Dome diameter	45 mm

WHEEL

Body material	Polypropylene, electric conductive
Tread Material Mix	Thermoplastic rubber, electric-conductive
Bearing	Plain bearing with spacer tube
Axle	Riveted
Threadguards	Without threadguard
Diameter	50 mm
Tread width	8 mm
Hardness of tread (A)	87 Shore A

FITTING

Fitting type	Stem with grip ring, with collar
Stem diameter	11 mm

© Copyright 2026 TENTE International GmbH

LUMINA

A520YGI050B10-11x20 DOM45

EAN 4031582341751

BETTER MOBILITY. BETTER LIFE.

Product Drawings

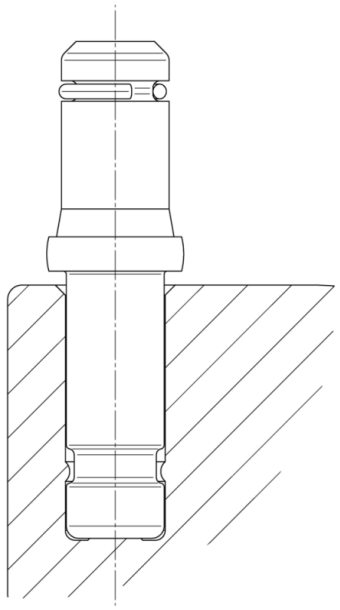

© Copyright 2026 TENTE International GmbH