PRODUCT INFORMATION

ALPHA STAINLESS

8470UFD200P63

EAN 4031582346886

BETTER MOBILITY. BETTER LIFE.

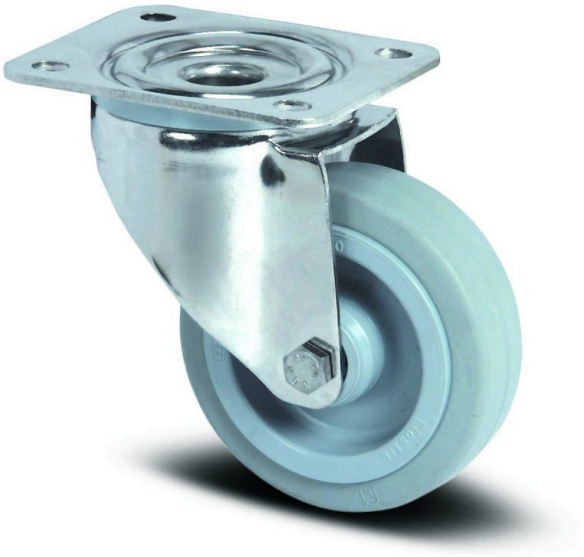

Image may differ from the original product

PERFORMANCE

Roll Performance	●●●●○
Movement noise	●●●●○
Attrition	●●●○○
Corrosion resistance	●●●●●

CORE ATTRIBUTES

Product name	Alpha stainless
Type	Swivel caster
Standard	EN12532 - Transport Equipment
Load capacity at 2.5 mph	881.85 lb
Electric conductive	no
Stainless	Yes
Load capacity Static	1763.7 lb
Temperature range (Minimum)	-4 °F
Temperature range (Maximum)	176 °F
Overall height	9.45 in
Overall width	3.78 in
Overall weight	5.77 lb

HOUSING

Housing Material	Stainless steel, heavy
Fork shape	Broad
Swivel bearing	Two ball races
Housing Color	Stainless steel
Offset	2.17 in
Swivel radius	6.1 in
Swivel interference	12.2 in
Dome diameter	3.78 in

WHEEL

Tread hardness	soft
Body material	Polyamide
Tread material	Elastic tire, non-marking, vulcanized
Bearing	Roller bearing, stainless
Axle	Screwed with nut
Wheel color	Silver gray (RAL7001)
Diameter	7.87 in
Tread width	1.81 in
Body width	1.81 in
Hardness of tread (A)	63 Shore A

FITTING

Fitting type	Rectangular plate
Plate length	5.39 in
Plate width	4.13 in
Plate hole length (Minimum)	2.95 in
Plate hole length (Maximum)	3.15 in
Plate hole width (Minimum)	2.95 in
Plate hole width (Maximum)	4.13 in
Plate hole diameter	0.43 in

© Copyright 2026 TENTE International GmbH

ALPHA STAINLESS

8470UFD200P63

EAN 4031582346886

Order number 00035540

Product Drawings

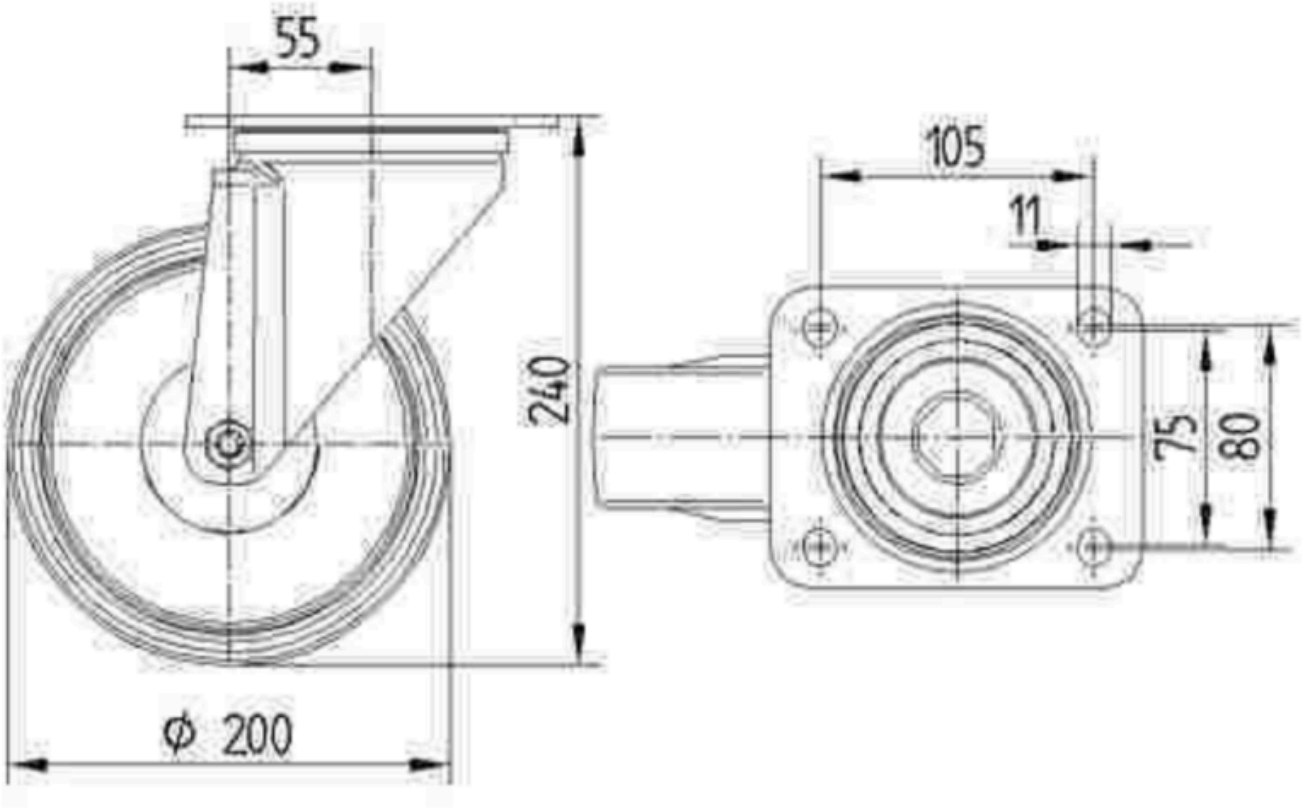

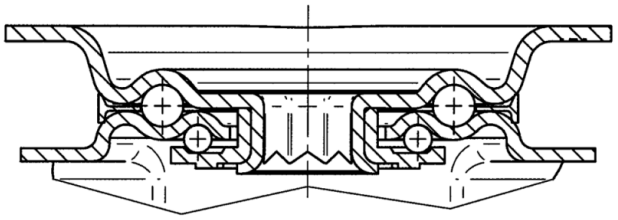

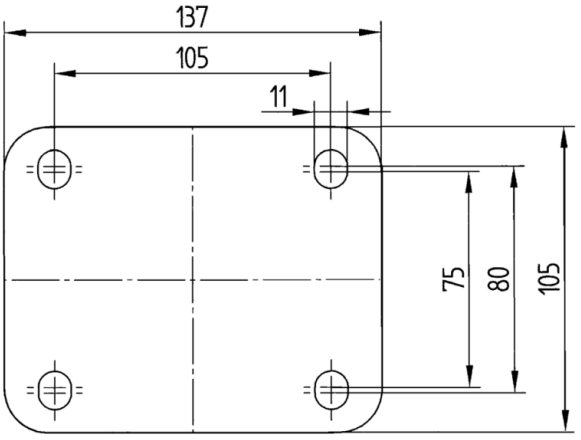

© Copyright 2026 TENTE International GmbH