PRODUCT INFORMATION

PURETECH

FVP 250x80-Ø30 HL90

EAN 4031582365429



Image may differ from the original product

WHEEL

Tread hardness	soft
Body material	Casting
Tread material	Solid rubber, black
Bearing	Precision ball bearing
Wheel color	Jet black (similar RAL9005)
Threadguards	With threadguard
Diameter	9.84 in
Tread width	3.15 in
Axle hole diameter	1.18 in
Hub length	3.54 in
Body width	3.15 in
Hardness of tread (A)	67 Shore A

PERFORMANCE

Roll Performance	●●○○○
Movement noise	●●●●●
Attrition	●●●○○
Corrosion resistance	●●●○○

CORE ATTRIBUTES

Product name	Puretech
Type	Wheel
Standard	EN12533 - Heavy Duty Castors
Load capacity at 2.5 mph	1785.74 lb
Load capacity at 3.7 mph	1488.12 lb
Electric conductive	no
Stainless	no
Load capacity Static	2976.24 lb
Temperature range (Minimum)	-4 °F
Temperature range (Maximum)	176 °F
Overall weight	15.22 lb

© Copyright 2026 TENTE International GmbH

PURETECH

FVP 250x80-Ø30 HL90

EAN 4031582365429

Order number 00836533

Product Drawings

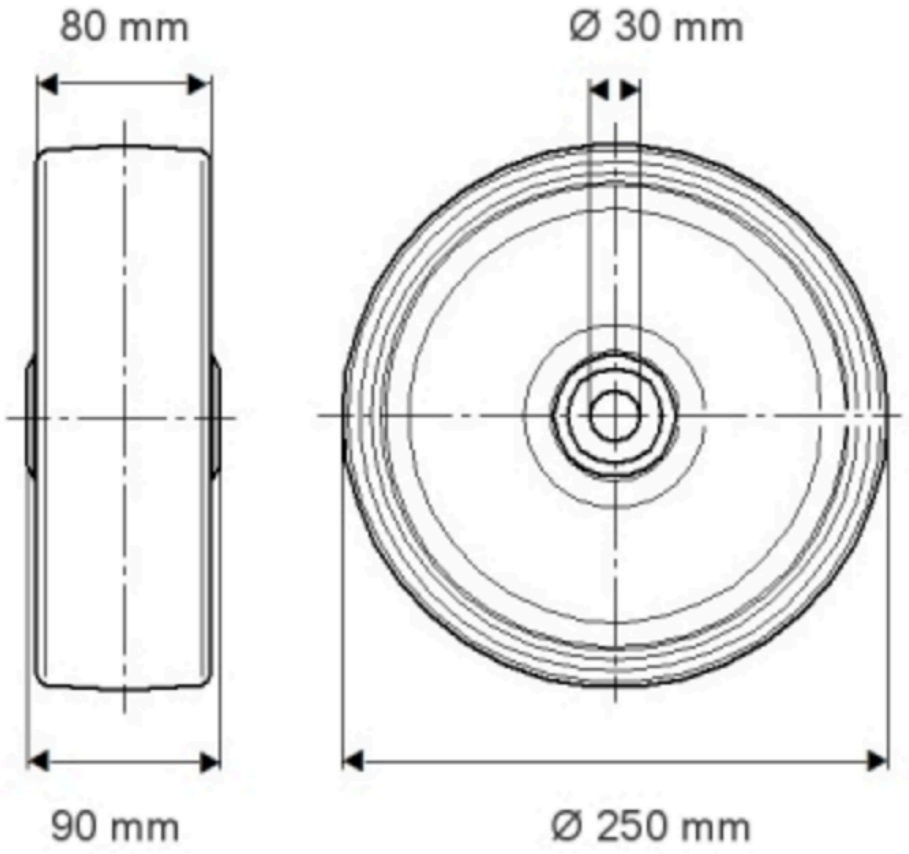

© Copyright 2026 TENTE International GmbH

PURETECH

FVP 250x80-Ø30 HL90

EAN 4031582365429

Order number 00830533

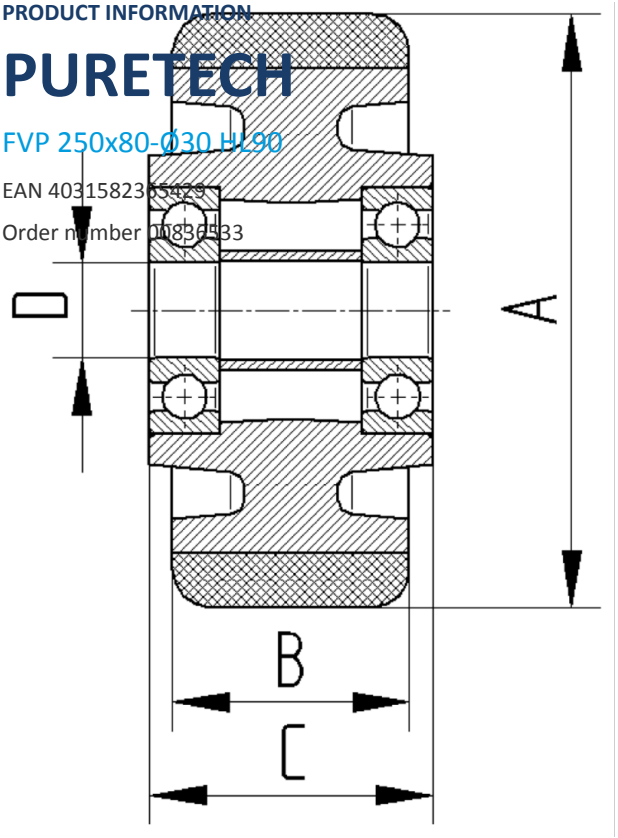

BETTER MOBILITY. BETTER LIFE.

© Copyright 2026 TENTE International GmbH