PRODUCT INFORMATION

MAXTECH EVO

PBO175x38-Ø12 HL35 TFR

EAN 4031582400373



Image may differ from the original product

PERFORMANCE

Roll Performance	●●●○○
Movement Noise	●●●○○
Attrition	●●●○○
Corrosion Resistance	●●●○○

CORE ATTRIBUTES

Product Name	Maxtech evo
Type	Wheel
Load capacity at 3 km/h	35 kg
Electric Conductive	No
Stainless	No
Load capacity Static	70 kg
Overall weight	0.33 kg

WHEEL

Body material	Polypropylene
Tread Material Mix	Polyurethane, biosourced, injected
Bearing	Plain bearing
Threadguards	Without threadguard
Diameter	175 mm
Tread width	38 mm
Axle Hole Diameter	12 mm
Hub Length	35 mm

© Copyright 2026 TENTE International GmbH

MAXTECH EVO

PBO175x38-Ø12 HL35 TFR

EAN 4031582400373

BETTER MOBILITY. BETTER LIFE.

Product Drawings

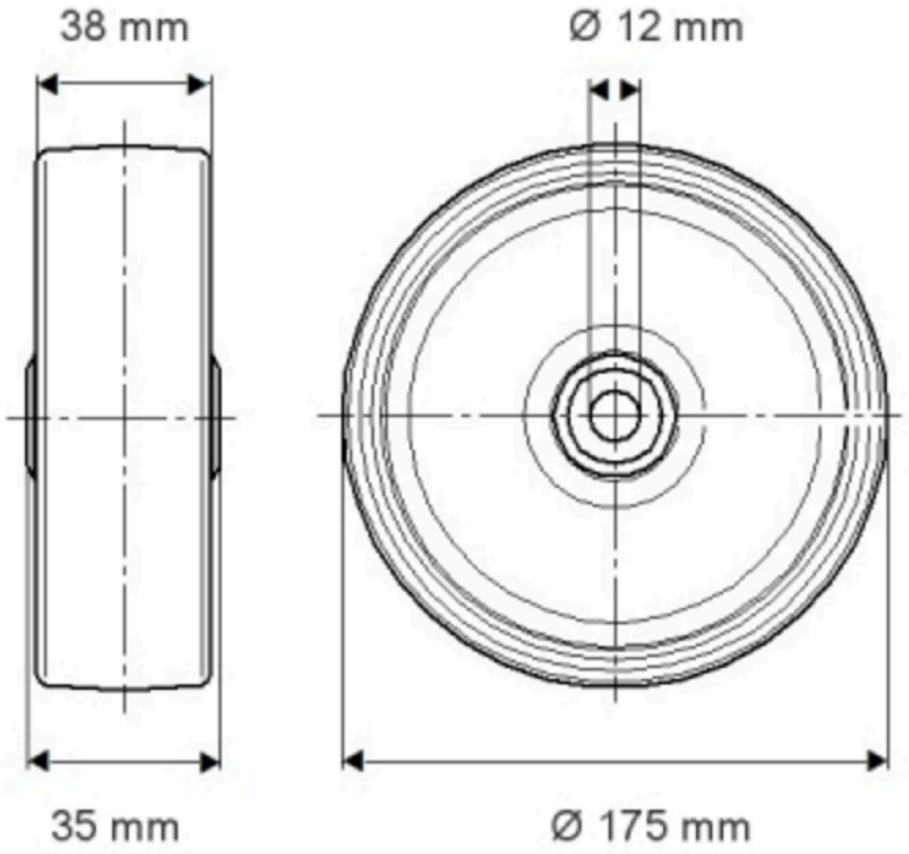

© Copyright 2026 TENTE International GmbH