PRODUCT INFORMATION

MAXTECH

UAD 125x32-Ø12 HL44 natural/3004

EAN 4031582322767



Image may differ from the original product

WHEEL

Body material	Polyamide
Tread material	Polyurethane, injected
Bearing	Roller bearing, stainless
Wheel color	Natural white
Diameter	4.92 in
Tread width	1.26 in
Axle hole diameter	0.47 in
Hub length	1.73 in
Body width	1.26 in
Hardness of tread (A)	92 Shore A
Hardness of tread (D)	42 Shore D

PERFORMANCE

Roll Performance	●●●○○
Movement noise	●●●○○
Attrition	●●●●○
Corrosion resistance	●●●●●

CORE ATTRIBUTES

Product name	Maxtech
Type	Wheel
Standard	EN12532 - Transport Equipment
Load capacity at 2.5 mph	440.92 lb
Electric conductive	no
Stainless	Yes
Load capacity Static	881.85 lb
Temperature range (Minimum)	-13 °F
Temperature range (Maximum)	176 °F
Overall weight	0.68 lb

© Copyright 2026 TENTE International GmbH

MAXTECH

UAD 125x32-Ø12 HL44 natural/3004

EAN 4031582322767

Order number 00034191

Product Drawings

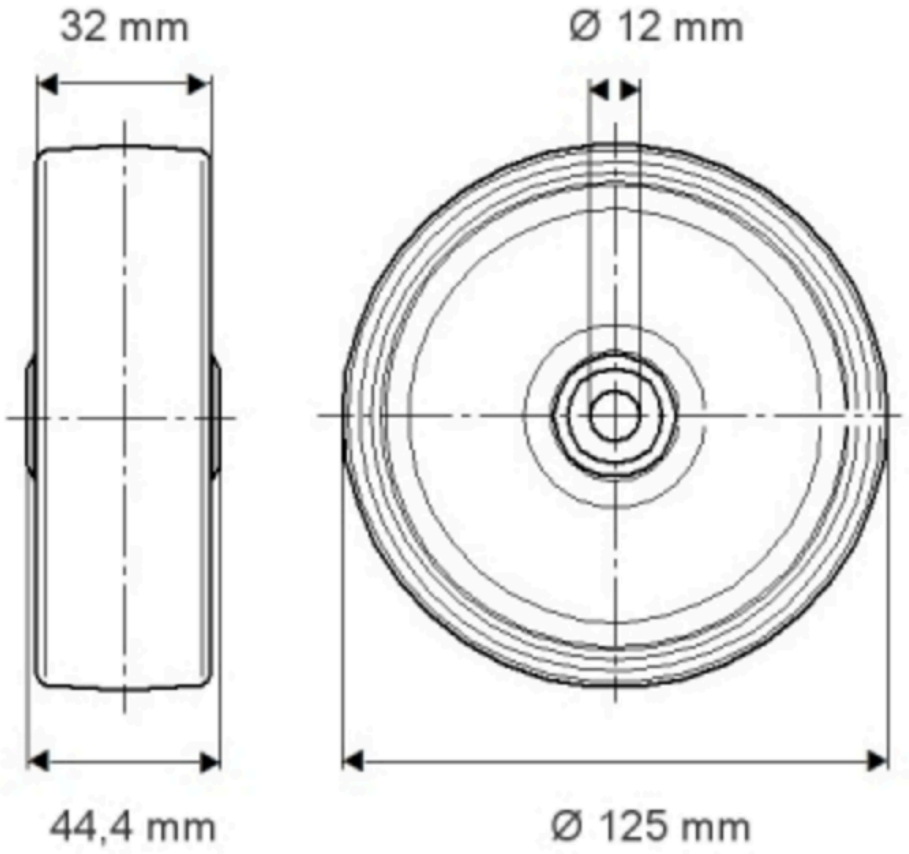

© Copyright 2026 TENTE International GmbH