PRODUCT INFORMATION

LUMINA

5520UOI075L51-11 RAL9006

EAN 4031582310658



Image may differ from the original product

PERFORMANCE

Roll Performance	●●●○○
Movement noise	●●●○○
Attrition	●●●●●
Corrosion resistance	●●●●○

CORE ATTRIBUTES

Product name	Lumina
Type	Swivel caster
Standard	EN12528 - Furniture Castors
Load capacity at 1.8 mph	220.46 lb
Electric conductive	no
Stainless	no
Load capacity Static	440.92 lb
Temperature range (Minimum)	-4 °F
Temperature range (Maximum)	140 °F
Overall height	3.46 in
Overall width	2.56 in
Overall weight	0.62 lb

HOUSING

Housing Material	Polyamide
Fork shape	Twin wheel housing, closed, with dome
Swivel bearing	Stem, swiveling
Housing Color	White aluminum (RAL9006)
Offset	1.18 in
Swivel radius	2.87 in
Swivel interference	5.75 in
Dome diameter	1.77 in

WHEEL

Body material	Polyamide
Tread material	Identical with wheel body
Bearing	Plain bearing with spacer tube
Axle	Riveted
Threadguards	Without threadguard
Diameter	2.95 in
Tread width	0.39 in
Hardness of tread (D)	75 Shore D

FITTING

Fitting type	Blind hole for B10 fitting
Bolt hole diameter	0.43 in

© Copyright 2026 TENTE International GmbH

LUMINA

5520UOI075L51-11 RAL9006

EAN 4031582310658

Order number 00073439

Product Drawings

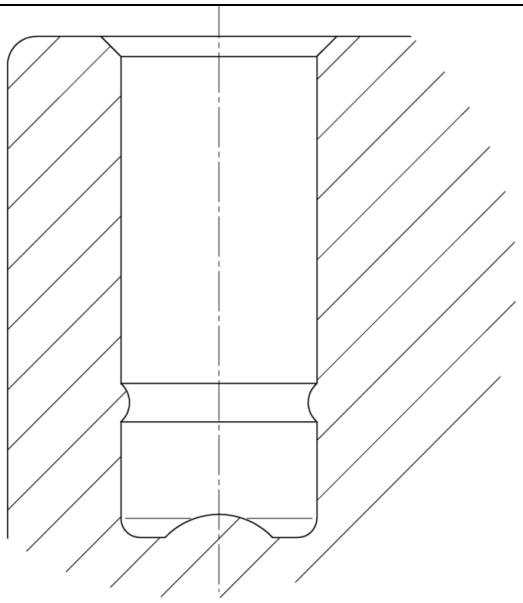

© Copyright 2026 TENTE International GmbH