PRODUCT INFORMATION

AGILA

2471PJP100R05-28

EAN 4031582301427

BETTER MOBILITY. BETTER LIFE.

Image may differ from the original product

PERFORMANCE

Roll performance	●●●○○
Movement noise	●●●○○
Attrition	●●●○○
Corrosion resistance	●●●○○

CORE ATTRIBUTES

Product name	Agila
Type	Swivel castor with directional lock
Standard	EN12530 - Devices Castors
Load capacity at 3 km/h	100 kg
Load capacity Static	200 kg
Temperature range (Minimum)	-20 °C
Temperature range (Maximum)	60 °C
Overall height	138 mm
Overall weight	1.031 kg

WHEEL

Body material	Polypropylene
Tread material	Thermoplastic rubber
Bearing	Precision ball bearing
Threadguards	With threadguard
Diameter	100 mm
Tread width	32 mm
Hardness of tread (A)	87 Shore A

HOUSING

Material fork	Steel sheet, medium
Fork shape	Broad
Swivel bearing	Two ball races
Offset	43.5 mm
Swivel radius	131 mm
Swivel interference	262 mm

FITTING

Fitting type	Solid stem, round
Bolt diameter	28 mm
Bolt length	45 mm

© Copyright 2026 TENTE International GmbH

AGILA

2471PJP100R05-28

EAN 4031582301427

BETTER MOBILITY. BETTER LIFE.
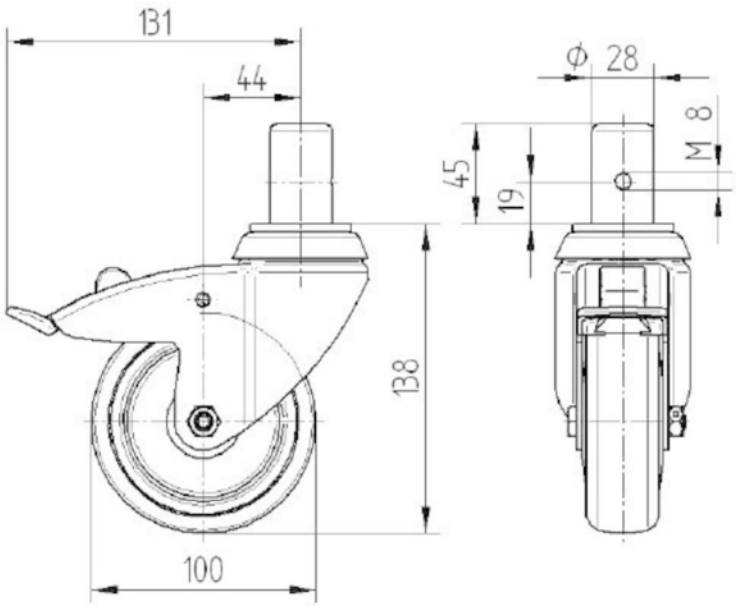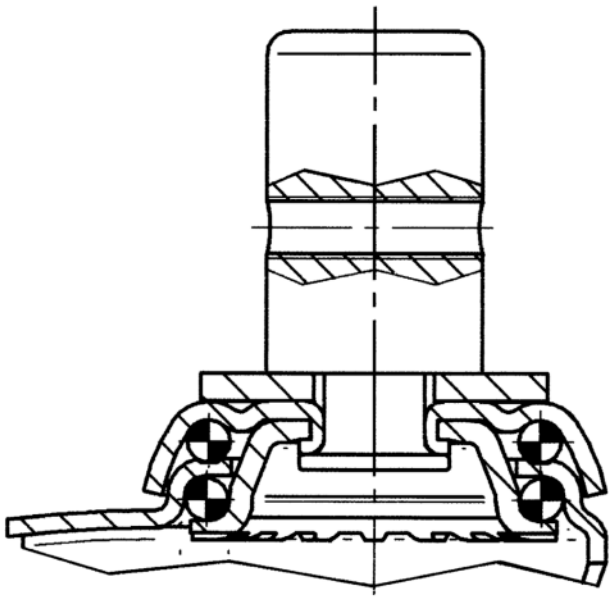
TECHNICAL DRAWINGS