PRODUCT INFORMATION

DURATECH SILENT

HUR100x36-Ø12 HL44

EAN 4031582452877



Image may differ from the original product

WHEEL

Body material	Damping, hybrid material
Tread material	Polyamide
Bearing	Roller bearing
Threadguards	Without threadguard
Diameter	3.94 in
Tread width	1.42 in
Axle hole diameter	0.47 in
Hub length	1.73 in
Hardness of tread (D)	75 Shore D

PERFORMANCE

Roll Performance	●●●○○
Movement noise	●●●●●
Attrition	●●●○○
Corrosion resistance	●●●○○

CORE ATTRIBUTES

Product name	Duratech silent
Type	Wheel
Standard	EN12532 - Transport Equipment
Load capacity at 2.5 mph	352.74 lb
Electric conductive	no
Stainless	no
Load capacity Static	705.48 lb
Temperature range (Minimum)	-4 °F
Temperature range (Maximum)	140 °F
Overall weight	0.88 lb

© Copyright 2026 TENTE International GmbH

DURATECH SILENT

HUR100x36-Ø12 HL44

EAN 4031582452877

BETTER MOBILITY. BETTER LIFE.

Product Drawings

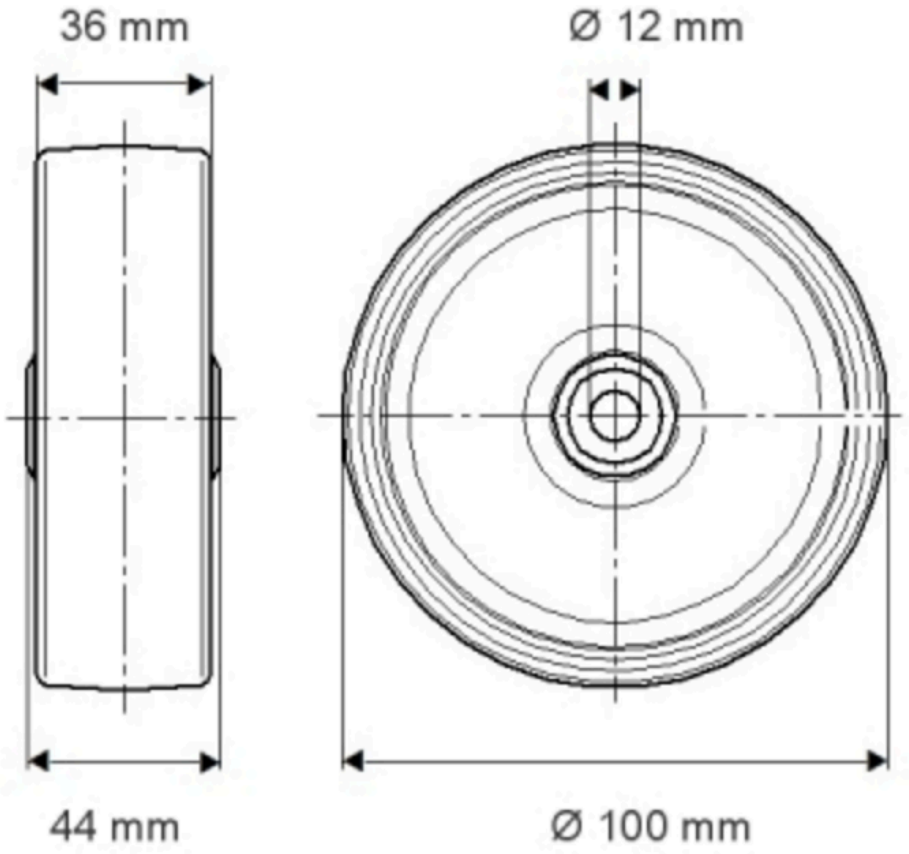

© Copyright 2026 TENTE International GmbH