PRODUCT INFORMATION

KAPPA LOAD

9652ITP160P63 CL67 cv

EAN 4031582367188



Image may differ from the original product

PERFORMANCE

Roll Performance	●●●●○
Movement Noise	●●●○○
Attrition	●●●●○
Corrosion Resistance	●●●●○

CORE ATTRIBUTES

Product Name	Kappa load
Type	Swivel castor with total lock, head end of castor
Standard	EN12532 - Transport Equipment
Load capacity at 4 km/h	800 kg
Load capacity at 6 km/h	640 kg
Electric Conductive	No
Stainless	No
Load capacity Static	1600 kg
Temperature range (Minimum)	-10 °C
Temperature range (Maximum)	60 °C
Overall Height	205 mm
Overall width	116 mm
Overall weight	4.36 kg

HOUSING

Housing Material	Iron forged, heavy
Fork shape	Broad, reinforced
Swivel Bearing	Deep-groove ball thrust roller bearing
Housing Color	Blue passivated
Offset	58 mm
Swivel radius	140 mm
Swivel interference	280 mm
Lubrication nipple	1
Dome diameter	111 mm

WHEEL

Tread profile	convex
Body material	Aluminium
Tread Material Mix	PUR casted premium
Bearing	Precision ball bearing
Axle	Screwed with nut
Wheel Color	Honey yellow (RAL1005)
Threadguards	Without threadguard
Diameter	160 mm
Tread width	50 mm
Body width	50 mm
Hardness of tread (A)	92 Shore A
Hardness of tread (D)	42 Shore D

FITTING

Fitting type	Medium rectangular plate
Plate length	135 mm
Plate width	110 mm
Plate hole length (Minimum)	75 mm
Plate hole length (Maximum)	80 mm
Plate hole width (Minimum)	75 mm
Plate hole width (Maximum)	105 mm
Plate hole diameter	11 mm

© Copyright 2026 TENTE International GmbH

KAPPA LOAD

9652ITP160P63 CL67 cv

EAN 4031582367188

Order number 00838842

Product Drawings

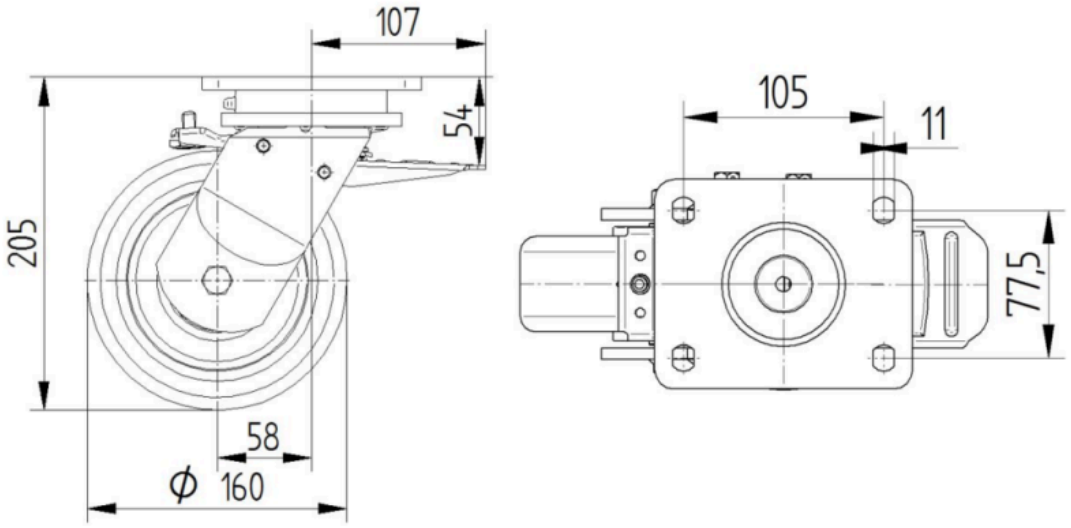

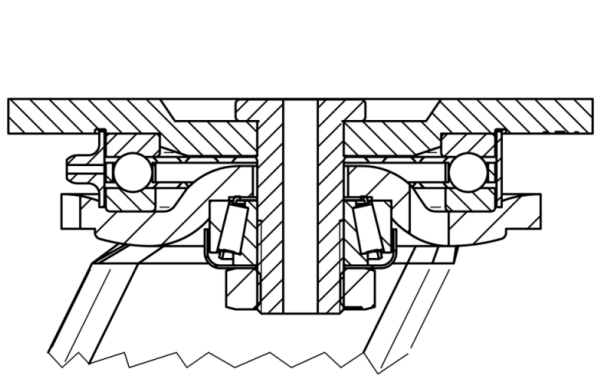

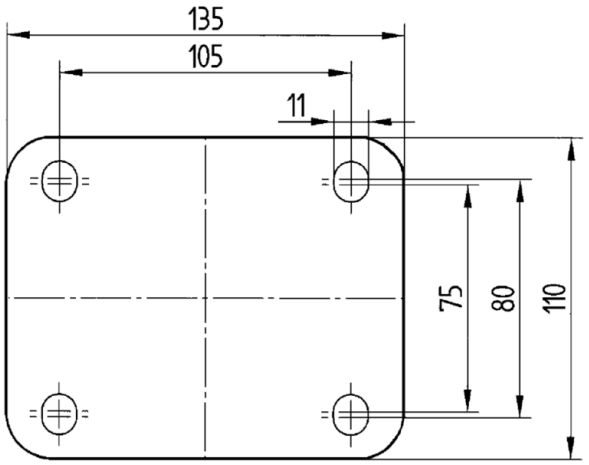

© Copyright 2026 TENTE International GmbH