PRODUCT INFORMATION

ELASTECH

IEP 250x50-Ø25 HL60

EAN 4031582319767



Image may differ from the original product

WHEEL

Tread hardness	soft
Body material	Aluminium
Tread Material Mix	Elastic tire, black, vulcanized
Bearing	Precision ball bearing
Wheel Color	Jet black (similar RAL9005)
Threadguards	Without threadguard
Diameter	250 mm
Tread width	50 mm
Axle Hole Diameter	25 mm
Hub Length	60 mm
Body width	50 mm
Hardness of tread (A)	68 Shore A

PERFORMANCE

Roll Performance	●●○○○
Movement Noise	●●●●●
Attrition	●●●○○
Corrosion Resistance	●●●○○

CORE ATTRIBUTES

Product Name	Elastech
Type	Wheel
Standard	EN12532 - Transport Equipment
Load capacity at 4 km/h	500 kg
Load capacity at 6 km/h	400 kg
Electric Conductive	No
Stainless	No
Load capacity Static	1000 kg
Temperature range (Minimum)	-20 °C
Temperature range (Maximum)	85 °C
Overall weight	2.34 kg

ELASTECH

IEP 250x50-Ø25 HL60

EAN 4031582319767

Order number 00801257

Product Drawings

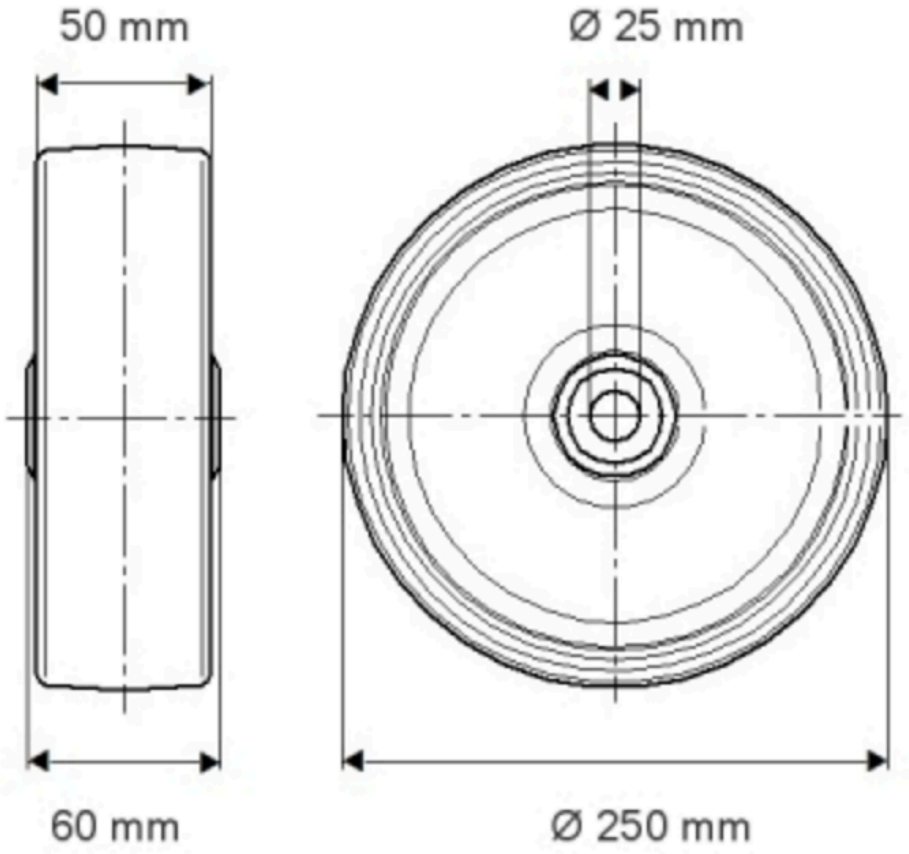

© Copyright 2026 TENTE International GmbH

ELASTECH

IEP 250x50-Ø25 HL60

EAN 4031582319767

Order number 00301257

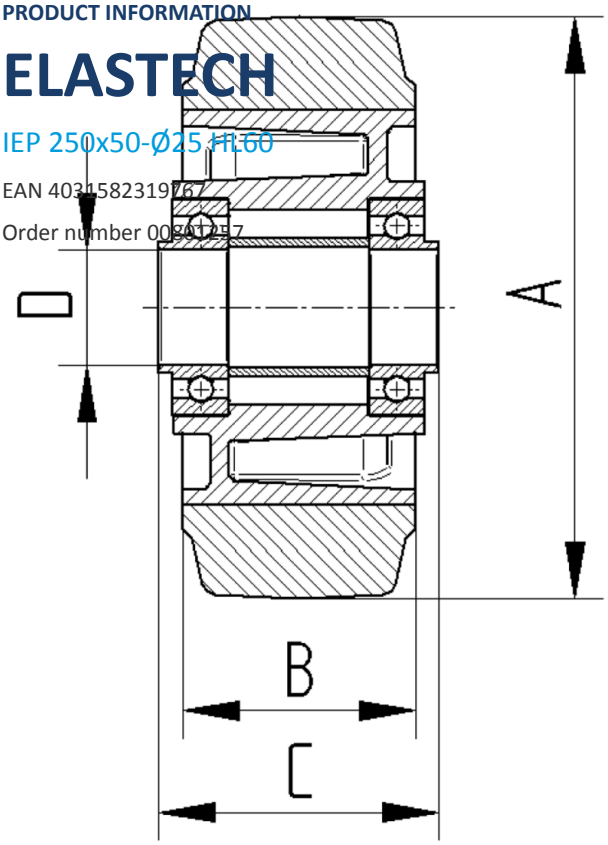

BETTER MOBILITY. BETTER LIFE.

© Copyright 2026 TENTE International GmbH