PRODUCT INFORMATION

ZETA REVERSE

468BITP125P63 cv

EAN 4031582398311

BETTER MOBILITY. BETTER LIFE.



Image may differ from the original product

PERFORMANCE

Roll Performance	●●●○○
Movement Noise	●●●●○
Attrition	●●●●○
Corrosion Resistance	●●●○○

CORE ATTRIBUTES

Product Name	Zeta reverse
Type	Swivel castor with total lock and spring loaded directional lock
Standard	EN12532 - Transport Equipment
Load capacity at 4 km/h	500 kg
Load capacity at 6 km/h	400 kg
Electric Conductive	No
Stainless	No
Load capacity Static	1000 kg
Temperature range (Minimum)	-10 °C
Temperature range (Maximum)	60 °C
Overall Height	164 mm
Overall width	96 mm
Overall weight	3.17 kg

HOUSING

Housing Material	Steel sheet, very heavy
Fork shape	Broad, reinforced
Swivel Bearing	Two ball races, reinforced or stainless
Housing Color	Blue passivated
Offset	60 mm
Swivel radius	161 mm
Swivel interference	322 mm
Dome diameter	96 mm

WHEEL

Tread profile	convex
Body material	Aluminium
Tread Material Mix	PUR casted premium
Bearing	Precision ball bearing
Axle	Screwed with nut
Wheel Color	Honey yellow (RAL1005)
Threadguards	Without threadguard
Diameter	125 mm
Tread width	50 mm
Body width	50 mm
Hardness of tread (A)	92 Shore A
Hardness of tread (D)	42 Shore D

FITTING

Fitting type	Medium rectangular plate
Plate length	137 mm
Plate width	105 mm
Plate hole length (Minimum)	75 mm
Plate hole length (Maximum)	80 mm
Plate hole width (Minimum)	75 mm
Plate hole width (Maximum)	105 mm
Plate hole diameter	11 mm

© Copyright 2026 TENTE International GmbH

ZETA REVERSE

468BITP125P63 cv

EAN 4031582398311

Order number 00860893

Product Drawings

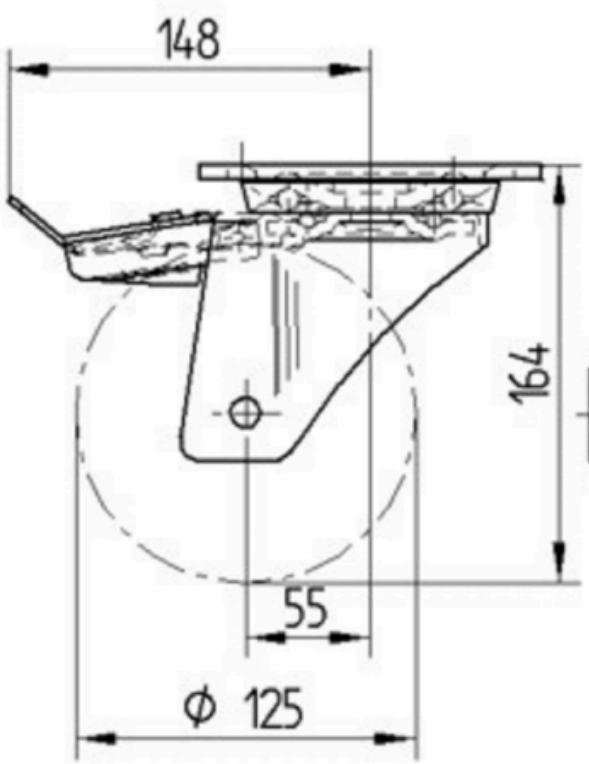

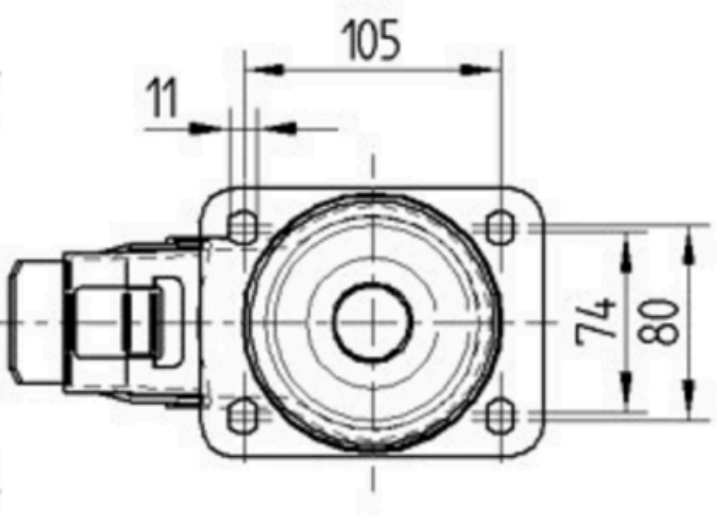

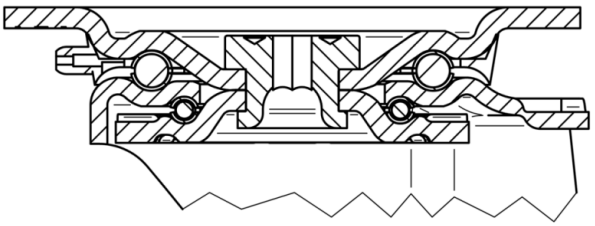

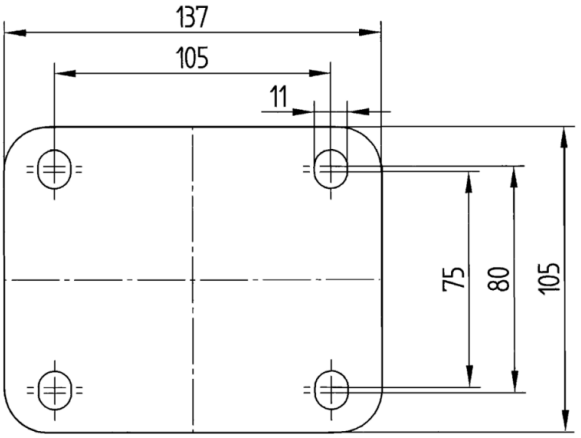

© Copyright 2026 TENTE International GmbH