PRODUCT INFORMATION

AGILA TWIN

2975YGO050P30-11

EAN 4031582357783



Image may differ from the original product

PERFORMANCE

Roll Performance	●●●○○
Movement noise	●●●○○
Attrition	●●●○○
Corrosion resistance	●●●○○

CORE ATTRIBUTES

Product name	Agila twin
Type	Swivel caster with wheel brake
Standard	EN12530 - Devices Castors
Load capacity at 1.8 mph	154.32 lb
Electric conductive	Yes
Stainless	no
Load capacity Static	308.65 lb
Temperature range (Minimum)	-4 °F
Temperature range (Maximum)	140 °F
Overall height	2.72 in
Overall weight	0.57 lb

HOUSING

Housing Material	Steel sheet, medium
Fork shape	Twin wheel housing
Swivel bearing	Two ball races
Offset	0.98 in
Swivel radius	3.03 in
Swivel interference	6.1 in

WHEEL

Body material	Polypropylene, electric conductive
Tread material	Thermoplastic rubber, electric-conductive
Bearing	Plain bearing
Threadguards	Without threadguard
Diameter	1.97 in
Tread width	0.75 in
Hardness of tread (A)	87 Shore A

FITTING

Fitting type	Bolt hole
Bolt hole diameter	0.43 in

© Copyright 2026 TENTE International GmbH

AGILA TWIN

2975YGO050P30-11

EAN 4031582357783

Order number 00034276

Product Drawings

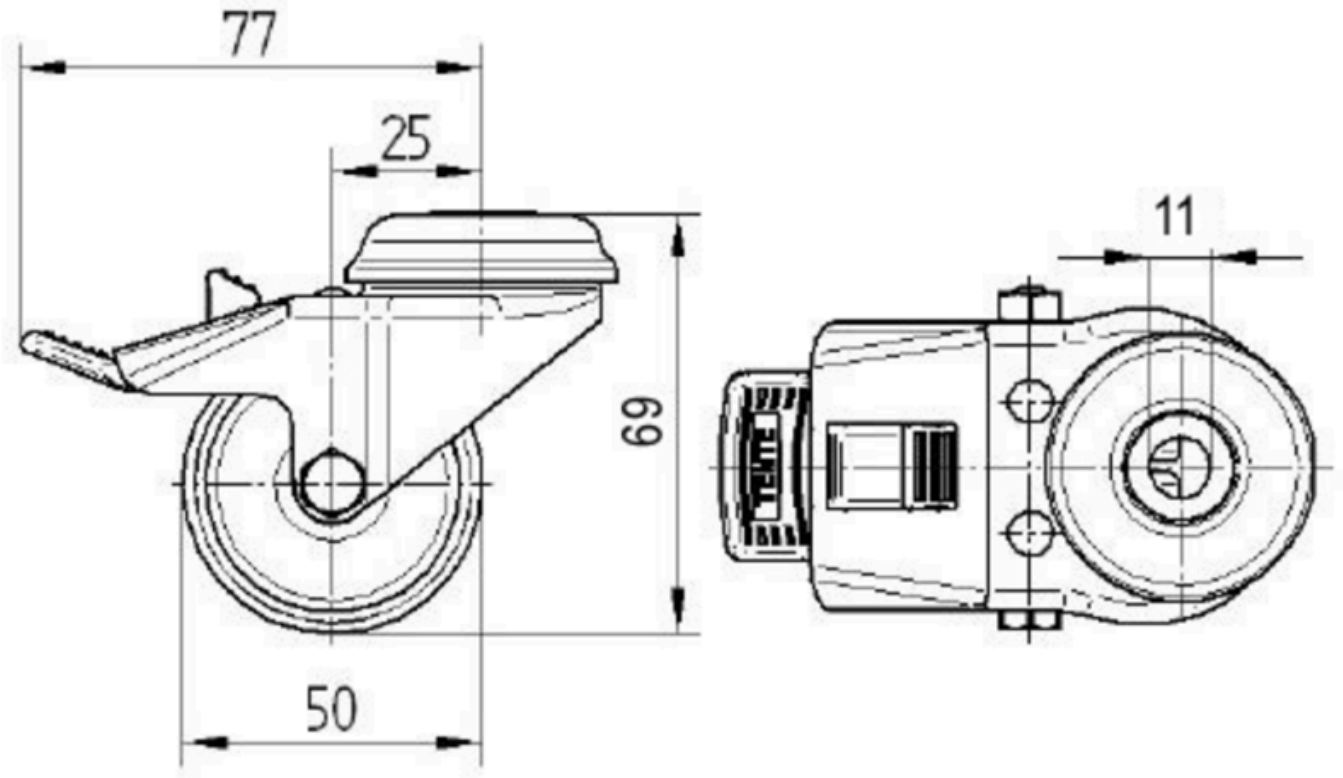

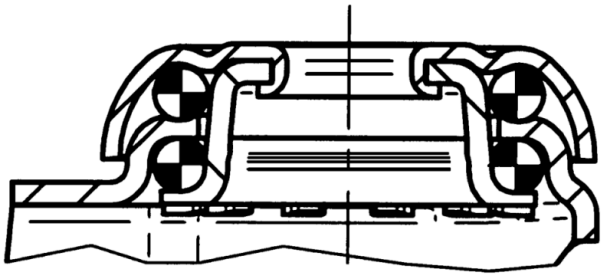

© Copyright 2026 TENTE International GmbH