PRODUCT INFORMATION

GALEA

5077YGP100P30-12

EAN 4031582354133

BETTER MOBILITY. BETTER LIFE.



Image may differ from the original product

PERFORMANCE

Roll Performance	●●●○○
Movement noise	●●●○○
Attrition	●●●○○
Corrosion resistance	●●●●○

CORE ATTRIBUTES

Product name	Galea
Type	Swivel caster with total lock
Standard	EN12530 - Devices Castors
Load capacity at 1.8 mph	220.46 lb
Electric conductive	Yes
Stainless	no
Load capacity Static	440.92 lb
Temperature range (Minimum)	-4 °F
Temperature range (Maximum)	140 °F
Overall height	5.47 in

HOUSING

Housing Material	Polyamide
Fork shape	Closed
Swivel bearing	Two ball races
Offset	1.57 in
Swivel interference	8.07 in

WHEEL

Body material	Polypropylene, electric conductive
Tread material	Thermoplastic rubber, electric-conductive
Bearing	Precision ball bearing
Threadguards	With threadguard
Diameter	3.94 in
Tread width	1.18 in
Hardness of tread (A)	87 Shore A

FITTING

Fitting type	Bolt hole
Bolt hole diameter	0.47 in

© Copyright 2026 TENTE International GmbH

GALEA

5077YGP100P30-12

EAN 4031582354133

BETTER MOBILITY. BETTER LIFE.

Product Drawings

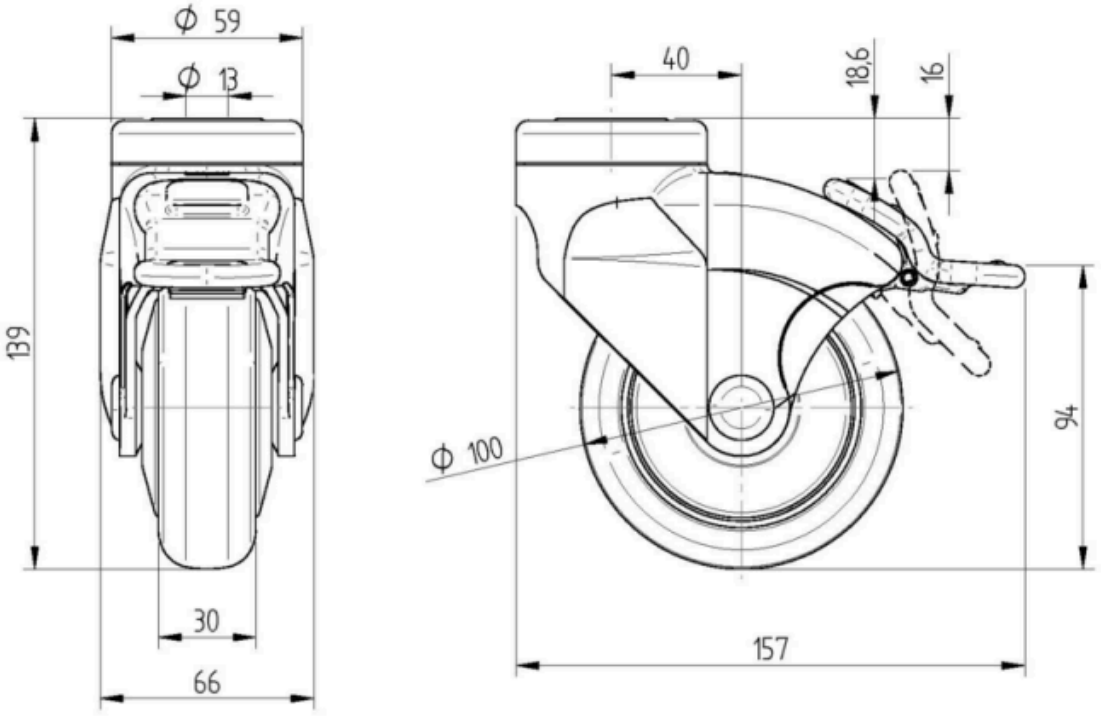

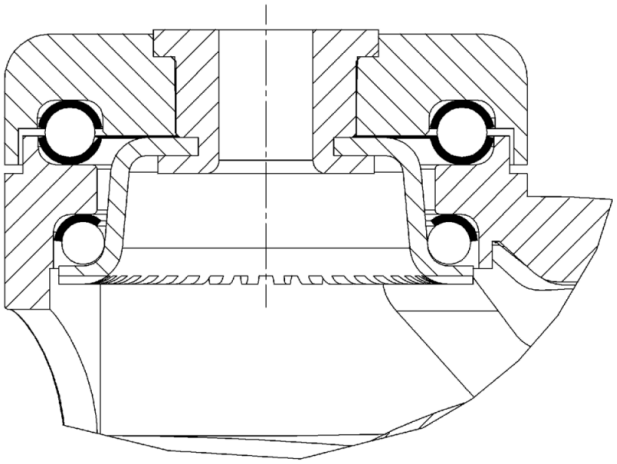

© Copyright 2026 TENTE International GmbH