PRODUCT INFORMATION

# LINEA LIGHT

5925UAP075L51-10 RAL7001 RAL7015-std-brake-lever English

EAN 4031582453928

BETTER MOBILITY. BETTER LIFE.



Image may differ from the original product

## PERFORMANCE

| | |
|---|---|
| Roll Performance | ●●●○○ |
| Movement noise | ●●●○○ |
| Attrition | ●●●○○ |
| Corrosion resistance | ●●●●○ |

## CORE ATTRIBUTES

| | |
|---|---|
| Product name | Linea light |
| Type | Swivel caster with wheel brake |
| Standard | EN12528 - Furniture Castors |
| Load capacity at 1.8 mph | 220.46 lb |
| Electric conductive | no |
| Stainless | no |
| Load capacity Static | 440.92 lb |
| Temperature range (Minimum) | 14 °F |
| Temperature range (Maximum) | 104 °F |
| Overall height | 2.97 in |
| Overall width | 2.17 in |
| Overall weight | 0.43 lb |

## HOUSING

| | |
|---|---|
| Housing Material | Polyamide |
| Fork shape | Twin wheel housing |
| Swivel bearing | Stem, swiveling |
| Housing Color | Silver gray (RAL7001) |
| Offset | 0.91 in |
| Swivel radius | 3.19 in |
| Swivel interference | 6.38 in |
| Dome diameter | 1.18 in |

## WHEEL

| | |
|---|---|
| Body material | Polyamide |
| Tread material | Polyurethane, injected |
| Bearing | Precision ball bearing |
| Threadguards | With threadguard |
| Diameter | 2.95 in |
| Tread width | 0.59 in |

## FITTING

| | |
|---|---|
| Fitting type | Blind hole for B10 fitting |
| Bolt hole diameter | 0.39 in |

Deutscher Designer Club

Interzum Award

IF Design Award

© Copyright 2026 TENTE International GmbH

# LINEA LIGHT

5925UAP075L51-10 RAL7001 RAL7015-std-brake-lever English

EAN 4031582453928

BETTER MOBILITY. BETTER LIFE.

## Product Drawings

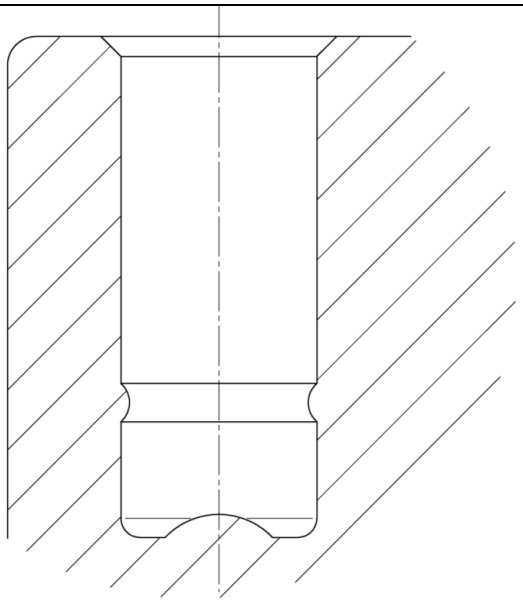

Deutscher Designer Club

Interzum Award

IF Design Award

© Copyright 2026 TENTE International GmbH