PRODUCT INFORMATION

AGILA

2477DIK100P30-13 TFR

EAN 4031582394450

BETTER MOBILITY. BETTER LIFE.



Image may differ from the original product

PERFORMANCE

Roll Performance	●●●○○
Movement noise	●●●○○
Attrition	●●●○○
Corrosion resistance	●●●○○

CORE ATTRIBUTES

Product name	Agila
Type	Swivel caster with total lock
Standard	EN12530 - Devices Castors
Load capacity at 1.8 mph	176.37 lb
Electric conductive	no
Stainless	no
Load capacity Static	352.74 lb
Temperature range (Minimum)	-4 °F
Temperature range (Maximum)	185 °F
Overall height	5.31 in
Overall weight	2.24 lb

HOUSING

Housing Material	Steel sheet, medium
Fork shape	Broad
Swivel bearing	Two ball races
Housing Color	Blue passivated
Offset	1.71 in
Swivel radius	5.16 in
Swivel interference	10.31 in

WHEEL

Body material	Sheet Steel
Tread material	Solid rubber, non-marking
Bearing	Cone ball bearing
Threadguards	With threadguard
Diameter	3.94 in
Tread width	1.26 in
Hardness of tread (A)	80 Shore A

FITTING

Fitting type	Bolt hole
Bolt hole diameter	0.51 in
Hint	Castors can be mounted with standard screws of any length.

© Copyright 2026 TENTE International GmbH

AGILA

2477DIK100P30-13 TFR

EAN 4031582394450

BETTER MOBILITY. BETTER LIFE.

Product Drawings

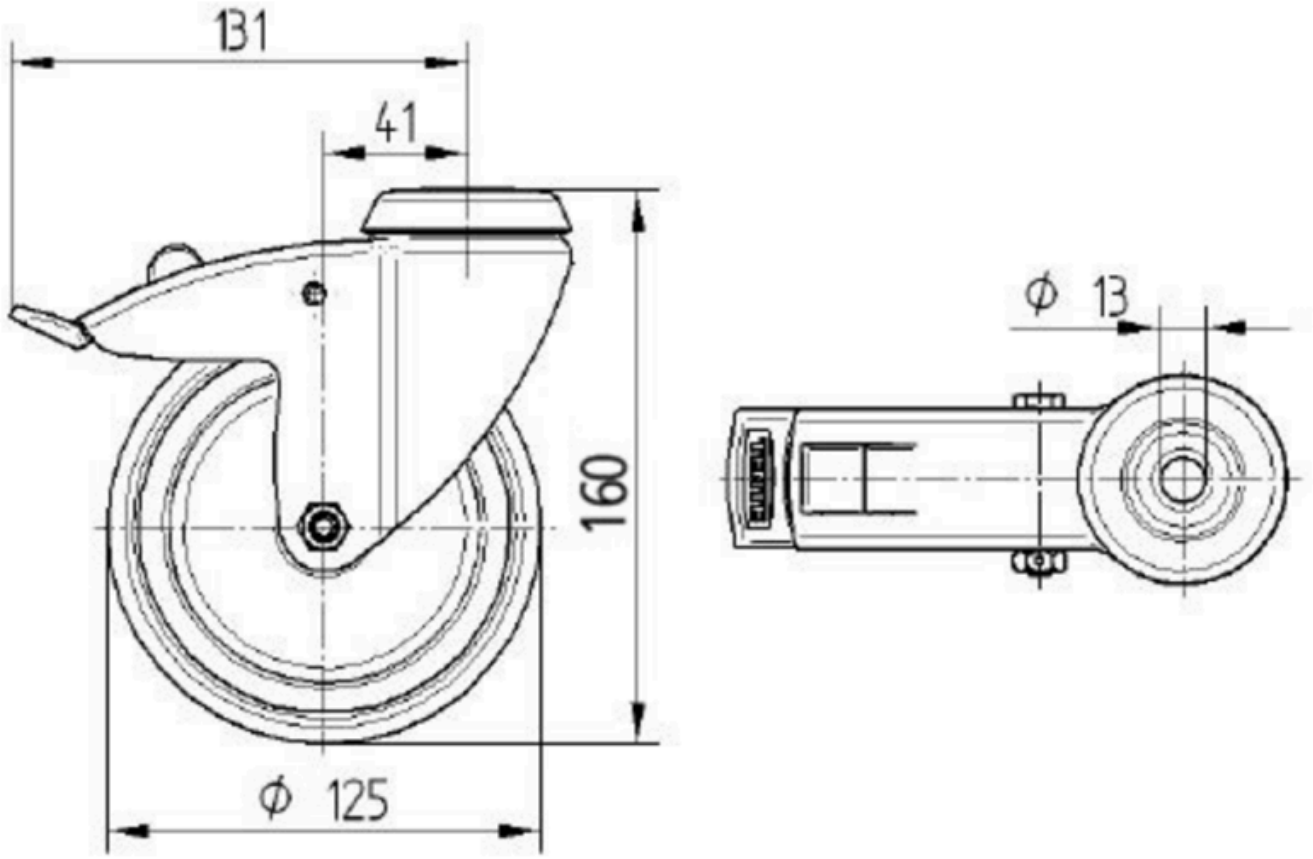

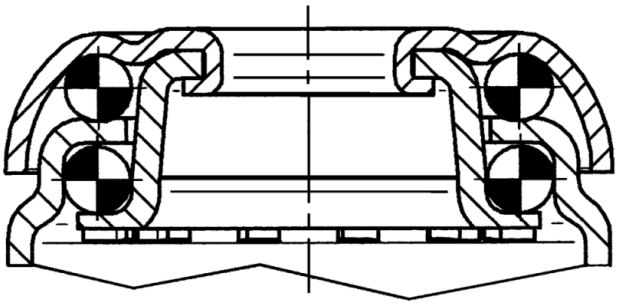

© Copyright 2026 TENTE International GmbH