PRODUCT INFORMATION

AGILA

2477YGO075P30-11

EAN 4031582342482

BETTER MOBILITY. BETTER LIFE.

Image may differ from the original product

PERFORMANCE

Roll Performance	●●●○○
Movement noise	●●●●○
Attrition	●●●○○
Corrosion resistance	●●●○○

CORE ATTRIBUTES

Product name	Agila
Type	Swivel caster with total lock
Standard	EN12530 - Devices Castors
Load capacity at 1.8 mph	165.35 lb
Electric conductive	Yes
Stainless	no
Load capacity Static	330.69 lb
Temperature range (Minimum)	-4 °F
Temperature range (Maximum)	140 °F
Overall height	3.94 in
Overall width	1.69 in
Overall weight	0.6 lb

HOUSING

Housing Material	Steel sheet, medium
Fork shape	Broad
Swivel bearing	Two ball races
Housing Color	Blue passivated
Offset	0.94 in
Swivel radius	3.15 in
Swivel interference	6.3 in
Dome diameter	1.69 in

WHEEL

Body material	Polypropylene, electric conductive
Tread material	Thermoplastic rubber, electric-conductive
Bearing	Plain bearing
Wheel color	Silver gray (similar RAL7001)
Threadguards	Without threadguard
Diameter	2.95 in
Tread width	0.98 in
Body width	0.98 in
Hardness of tread (A)	87 Shore A

FITTING

Fitting type	Bolt hole
Bolt hole diameter	0.43 in
Hint	Castors can be mounted with standard screws of any length.

© Copyright 2026 TENTE International GmbH

AGILA

2477YGO075P30-11

EAN 4031582342482

Order number 00006851
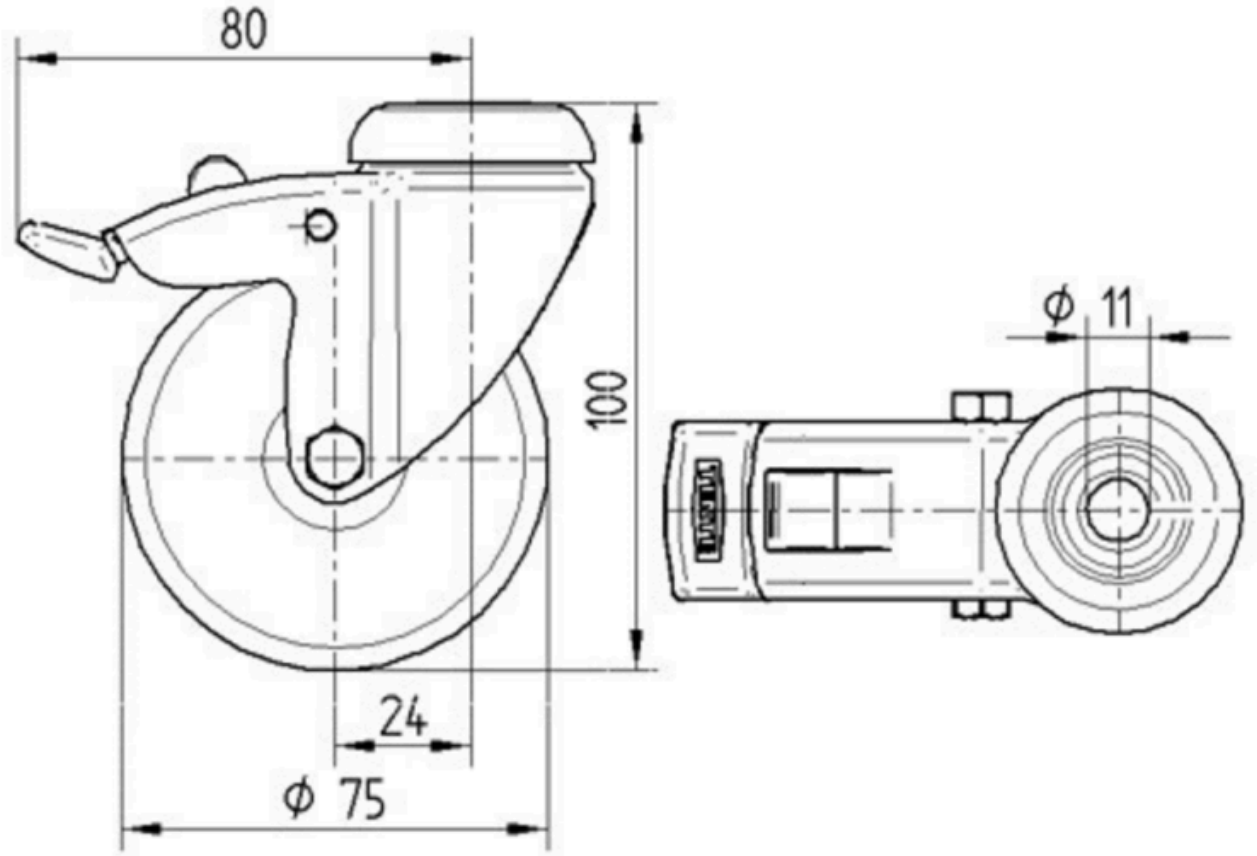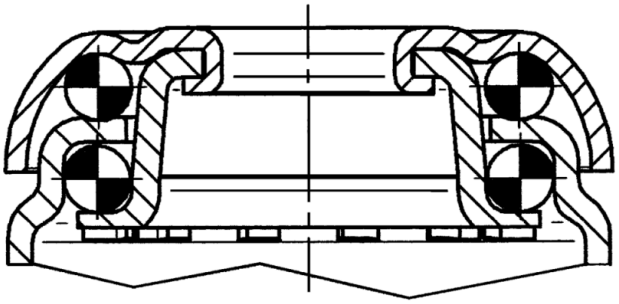
Product Drawings