PRODUCT INFORMATION

# BASETECH

## POR 108x36-Ø12 HL44,4

EAN 4031582320794

BETTER MOBILITY. BETTER LIFE.




Image may differ from the original product

### WHEEL

| | |
|---|---|
| Body material | Polypropylene |
| Tread material | Identical with wheel body |
| Bearing | Roller bearing |
| Wheel color | Graphite black (RAL9011) |
| Threadguards | Without threadguard |
| Diameter | 4.25 in |
| Tread width | 1.42 in |
| Axle hole diameter | 0.47 in |
| Hub length | 1.75 in |
| Body width | 1.42 in |
| Hardness of tread (D) | 65 Shore D |

### PERFORMANCE

| | |
|---|---|
| Roll Performance | ●●●○○ |
| Movement noise | ●●●○○ |
| Attrition | ●●●●○ |
| Corrosion resistance | ●●●○○ |

### CORE ATTRIBUTES

| | |
|---|---|
| Product name | Basetech |
| Type | Wheel |
| Standard | EN12532 - Transport Equipment |
| Load capacity at 2.5 mph | 352.74 lb |
| Electric conductive | no |
| Stainless | no |
| Load capacity Static | 705.48 lb |
| Temperature range (Minimum) | -4 °F |
| Temperature range (Maximum) | 140 °F |
| Overall weight | 0.34 lb |

© Copyright 2026 TENTE International GmbH

# BASETECH

## POR 108x36-Ø12 HL44,4

EAN 4031582320794

Order number 00030953

**Product Drawings**

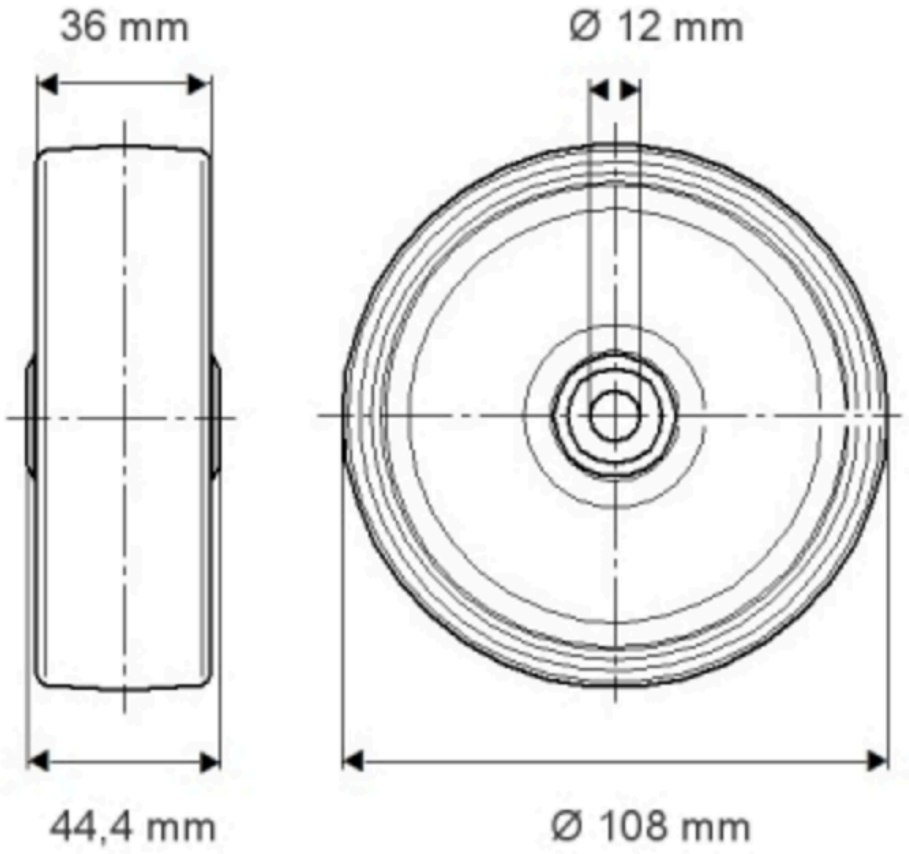


© Copyright 2026 TENTE International GmbH