PRODUCT INFORMATION

NOVATECH

FTX140x60-Ø12 HL65-A

EAN 4031582332070



Image may differ from the original product

WHEEL

Body material	Cast iron
Tread Material Mix	PUR casted premium
Bearing	Precision ball bearing, sealed
Threadguards	With threadguard
Diameter	140 mm
Tread width	60 mm
Axle Hole Diameter	12 mm
Hub Length	65 mm
Hardness of tread (A)	92 Shore A
Bearing type	6006 2RS
Sealing type	A
Suitable for	bt_linde

PERFORMANCE

Roll Performance	●●●○○
Movement Noise	●●●○○
Attrition	●●●●○
Corrosion Resistance	●●●○○

CORE ATTRIBUTES

Product Name	Novatech
Type	Wheel
Load capacity at 3 km/h	700 kg
Electric Conductive	No
Stainless	No
Load capacity Static	1400 kg
Temperature range (Minimum)	-20 °C
Temperature range (Maximum)	60 °C
Overall weight	2.99 kg

© Copyright 2026 TENTE International GmbH

NOVATECH

FTX140x60-Ø12 HL65-A

EAN 4031582332070

BETTER MOBILITY. BETTER LIFE.

Product Drawings

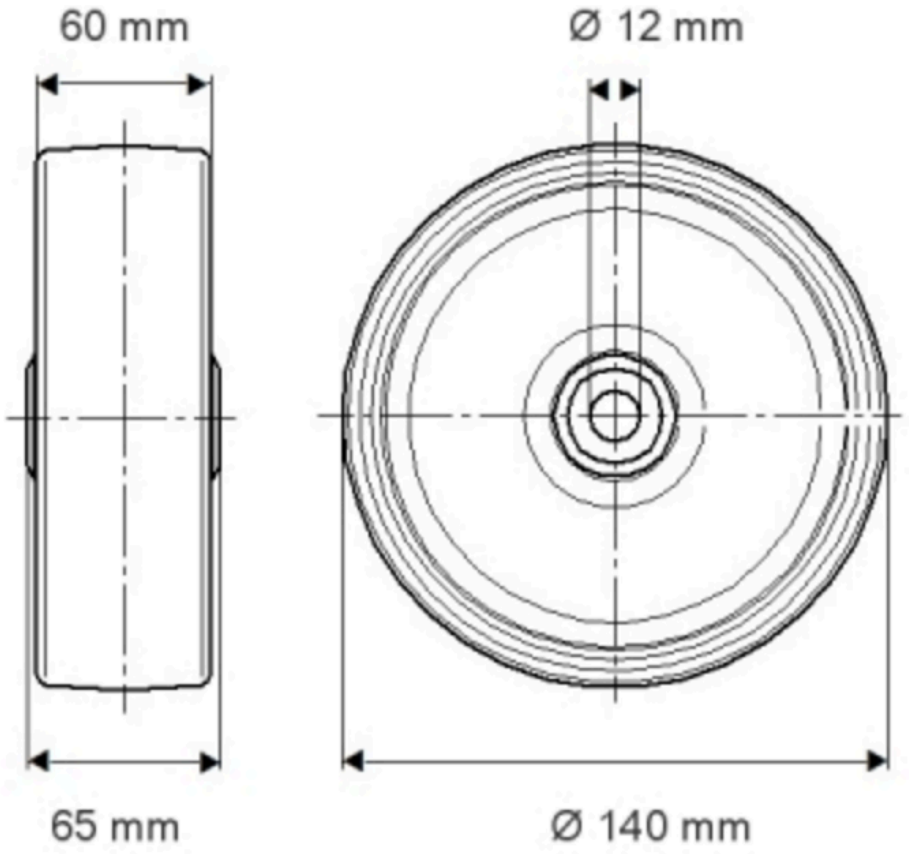

© Copyright 2026 TENTE International GmbH