PRODUCT INFORMATION

# AGILA TWIN

2977PIO075P30-10

EAN 4031582362305



Image may differ from the original product

## PERFORMANCE

| | |
|---|---|
| Roll Performance | ●●●○○ |
| Movement noise | ●●●○○ |
| Attrition | ●●●○○ |
| Corrosion resistance | ●●●○○ |

## CORE ATTRIBUTES

| | |
|---|---|
| Product name | Agila twin |
| Type | Swivel caster with total lock |
| Standard | EN12530 - Devices Castors |
| Load capacity at 1.8 mph | 176.37 lb |
| Electric conductive | no |
| Stainless | no |
| Load capacity Static | 352.74 lb |
| Temperature range (Minimum) | -4 °F |
| Temperature range (Maximum) | 140 °F |
| Overall height | 3.9 in |
| Overall weight | 1.29 lb |

## HOUSING

| | |
|---|---|
| Housing Material | Steel sheet, medium |
| Fork shape | Twin wheel housing |
| Swivel bearing | Two ball races |
| Offset | 1.24 in |
| Swivel radius | 3.9 in |
| Swivel interference | 7.8 in |

## WHEEL

| | |
|---|---|
| Body material | Polypropylene |
| Tread material | Solid rubber, non-marking |
| Bearing | Plain bearing |
| Threadguards | Without threadguard |
| Diameter | 2.95 in |
| Tread width | 0.98 in |
| Hardness of tread (A) | 80 Shore A |

## FITTING

| | |
|---|---|
| Fitting type | Bolt hole |
| Bolt hole diameter | 0.39 in |

© Copyright 2026 TENTE International GmbH

# AGILA TWIN

2977PIO075P30-10

EAN 4031582362305

BETTER MOBILITY. BETTER LIFE.

## Product Drawings

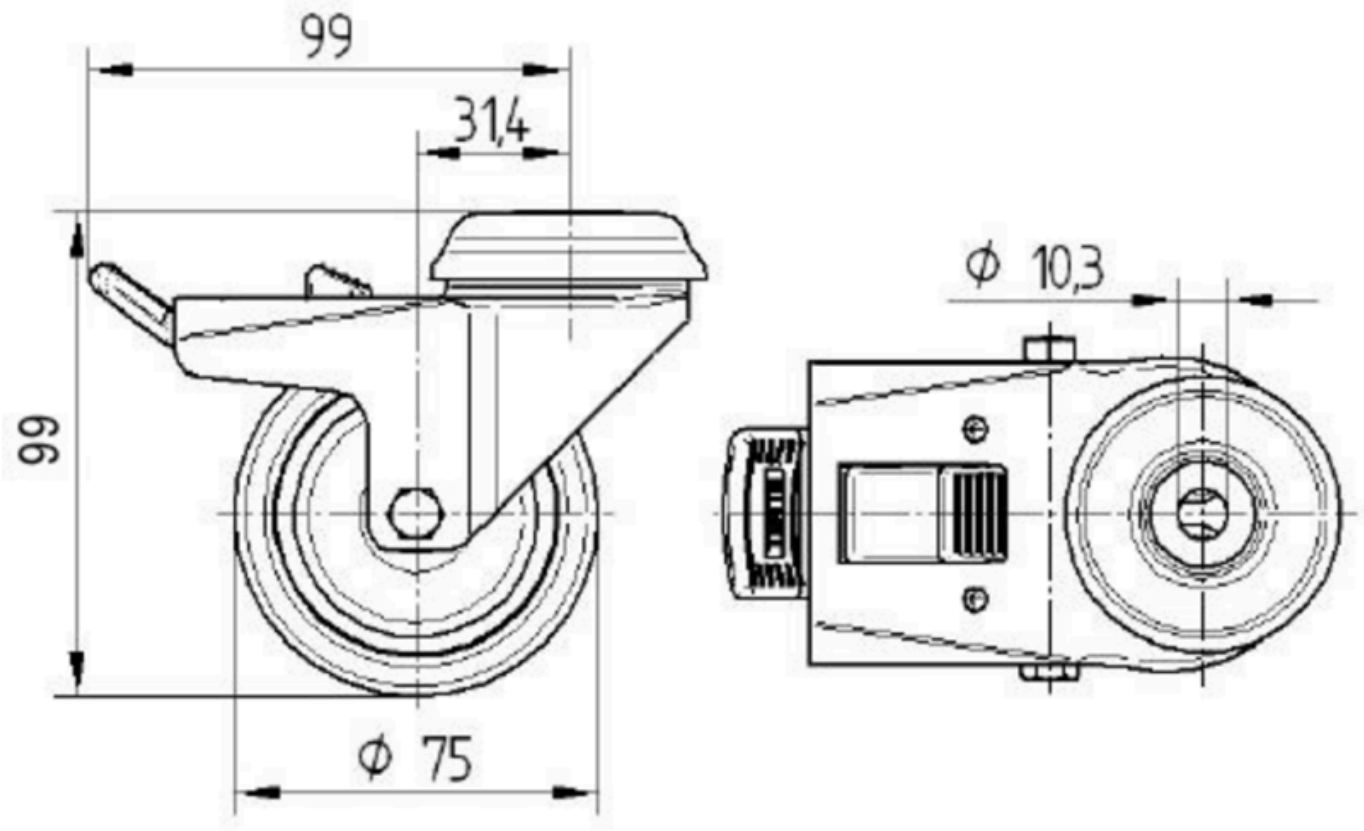


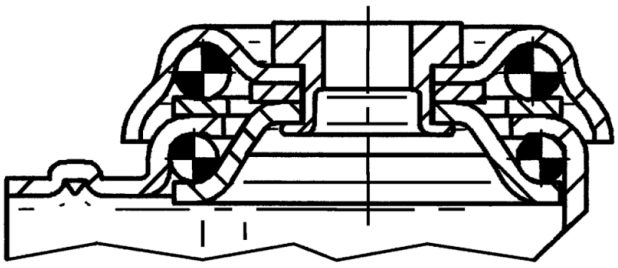

© Copyright 2026 TENTE International GmbH