PRODUCT INFORMATION

LUMINA

AA23PJI050L51-10 9011/9011/7042

EAN 4031582413045

BETTER MOBILITY. BETTER LIFE.



Image may differ from the original product

PERFORMANCE

Roll Performance	●●●○○
Movement Noise	●●●○○
Attrition	●●●○○
Corrosion Resistance	●●●○○

CORE ATTRIBUTES

Product Name	Lumina
Type	Swivel castor with intermittend brake
Standard	EN12529 - Swivel Chairs Castors
Load capacity at 3 km/h	40 kg
Electric Conductive	No
Stainless	No
Load capacity Static	80 kg
Temperature range (Minimum)	-20 °C
Temperature range (Maximum)	60 °C
Overall Height	54 mm
Overall width	55 mm
Overall weight	0.07 kg

HOUSING

Housing Material	Polypropylene
Fork shape	Twin wheel housing, closed
Swivel Bearing	Stem, swiveling
Housing Color	Graphite black (RAL9011)
Offset	20 mm
Swivel radius	52 mm
Swivel interference	104 mm
Dome diameter	0 mm

WHEEL

Body material	Polypropylene
Tread Material Mix	Thermoplastic rubber
Bearing	Plain bearing with spacer tube
Axle	Riveted
Tread Color	Traffic grey A (RAL7042)
Wheel Color	Graphite black (RAL9011)
Threadguards	Without threadguard
Diameter	50 mm
Tread width	8 mm
Axle Hole Diameter	0 mm
Hub Length	0 mm
Body width	8 mm
Hardness of tread (A)	87 Shore A

FITTING

Fitting type	Blind hole for B10
Bolt hole diameter	10 mm

© Copyright 2026 TENTE International GmbH

LUMINA

AA23PJI050L51-10 9011/9011/7042

EAN 4031582413045

BETTER MOBILITY. BETTER LIFE.

Product Drawings

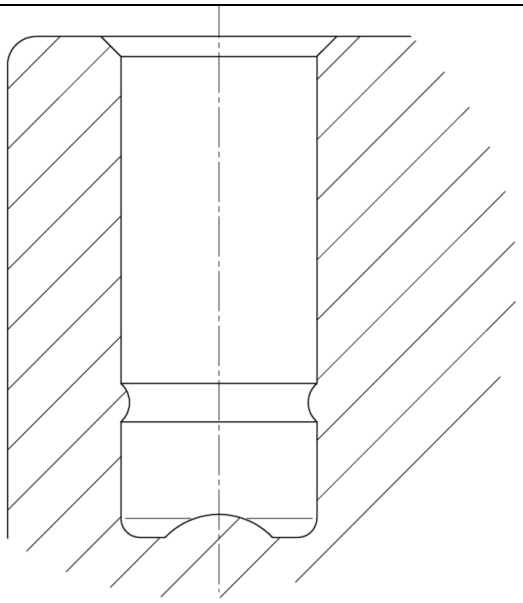

© Copyright 2026 TENTE International GmbH