PRODUCT INFORMATION

NOVATECH

ITB 250x55-Ø35 HL60

EAN 4031582397994



Image may differ from the original product

WHEEL

Body material	Aluminum
Tread material	Polyurethane, casted
Bearing	Bore with keyway
Wheel color	Honey yellow (RAL1005)
Threadguards	Without threadguard
Diameter	9.84 in
Tread width	2.17 in
Axle hole diameter	1.38 in
Hub length	2.36 in
Body width	2.17 in
Hardness of tread (A)	92 Shore A
Hardness of tread (D)	42 Shore D

PERFORMANCE

Roll Performance	●●●●○
Movement noise	●●●○○
Attrition	●●●●○
Corrosion resistance	●●●○○

CORE ATTRIBUTES

Product name	Novatech
Type	Wheel
Standard	EN12532 - Transport Equipment
Load capacity at 2.5 mph	2645.54 lb
Load capacity at 3.7 mph	2204.62 lb
Electric conductive	no
Stainless	no
Load capacity Static	4409.24 lb
Temperature range (Minimum)	14 °F
Temperature range (Maximum)	140 °F
Overall weight	4.03 lb

© Copyright 2026 TENTE International GmbH

NOVATECH

ITB 250x55-Ø35 HL60

EAN 4031582397994

Order number 00861408

Product Drawings

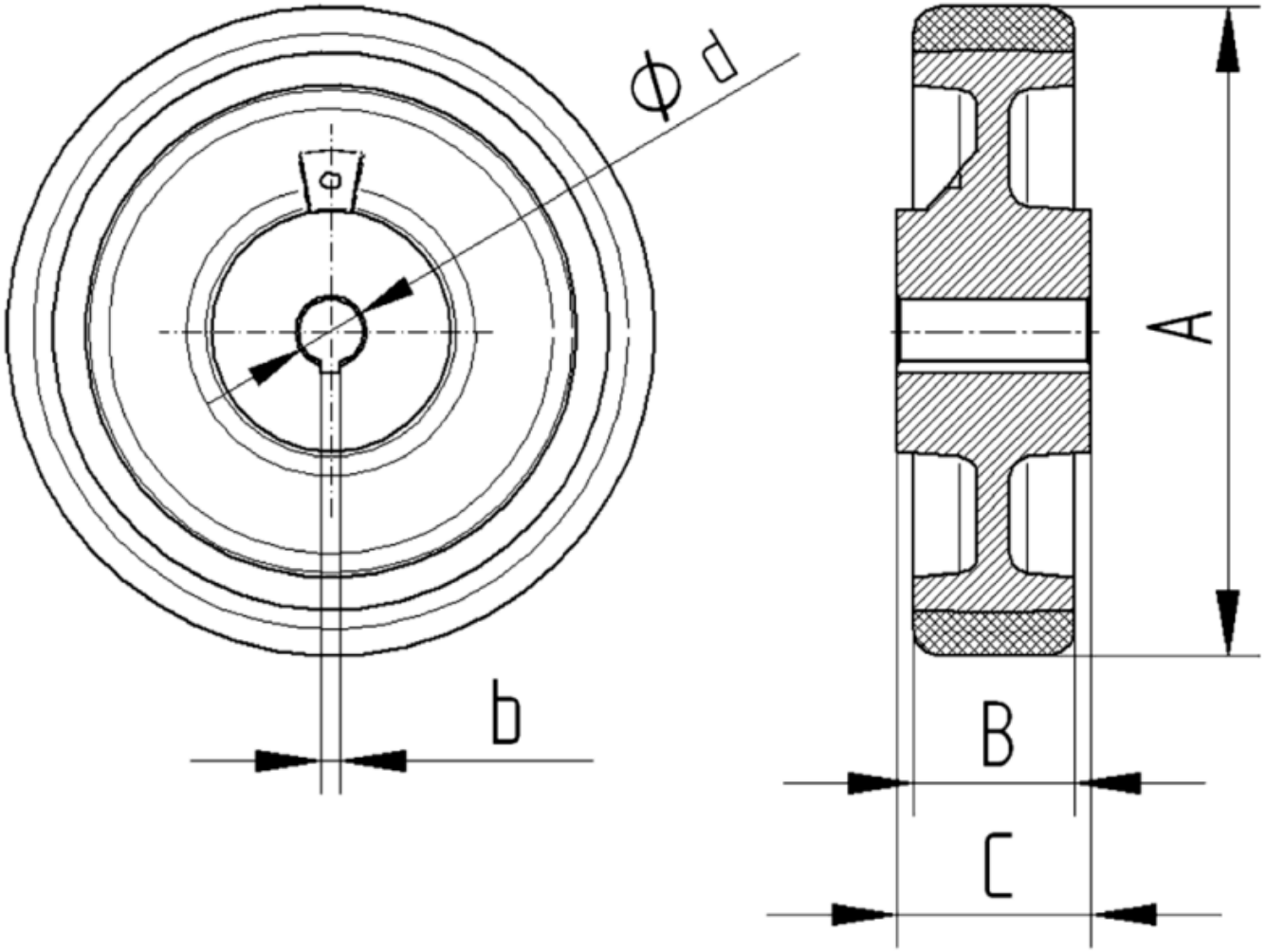

© Copyright 2026 TENTE International GmbH