PRODUCT INFORMATION

ELASTECH

IFP 250x50-Ø20 HL60

EAN 4031582366280



Image may differ from the original product

WHEEL

Tread hardness	soft
Body material	Aluminium
Tread Material Mix	Elastic tire, non-marking, vulcanized
Bearing	Precision ball bearing
Wheel Color	Grey / non marking
Threadguards	Without threadguard
Diameter	250 mm
Tread width	50 mm
Axle Hole Diameter	20 mm
Hub Length	60 mm
Body width	50 mm
Hardness of tread (A)	68 Shore A

PERFORMANCE

Roll Performance	●●○○○
Movement Noise	●●●●●
Attrition	●●●○○
Corrosion Resistance	●●●○○

CORE ATTRIBUTES

Product Name	Elastech
Type	Wheel
Standard	EN12532 - Transport Equipment
Load capacity at 4 km/h	500 kg
Load capacity at 6 km/h	400 kg
Electric Conductive	No
Stainless	No
Load capacity Static	1000 kg
Temperature range (Minimum)	-20 °C
Temperature range (Maximum)	85 °C
Overall weight	2.37 kg

© Copyright 2026 TENTE International GmbH

ELASTECH

IFP 250x50-Ø20 HL60

EAN 4031582366280

Order number 00838557

Product Drawings

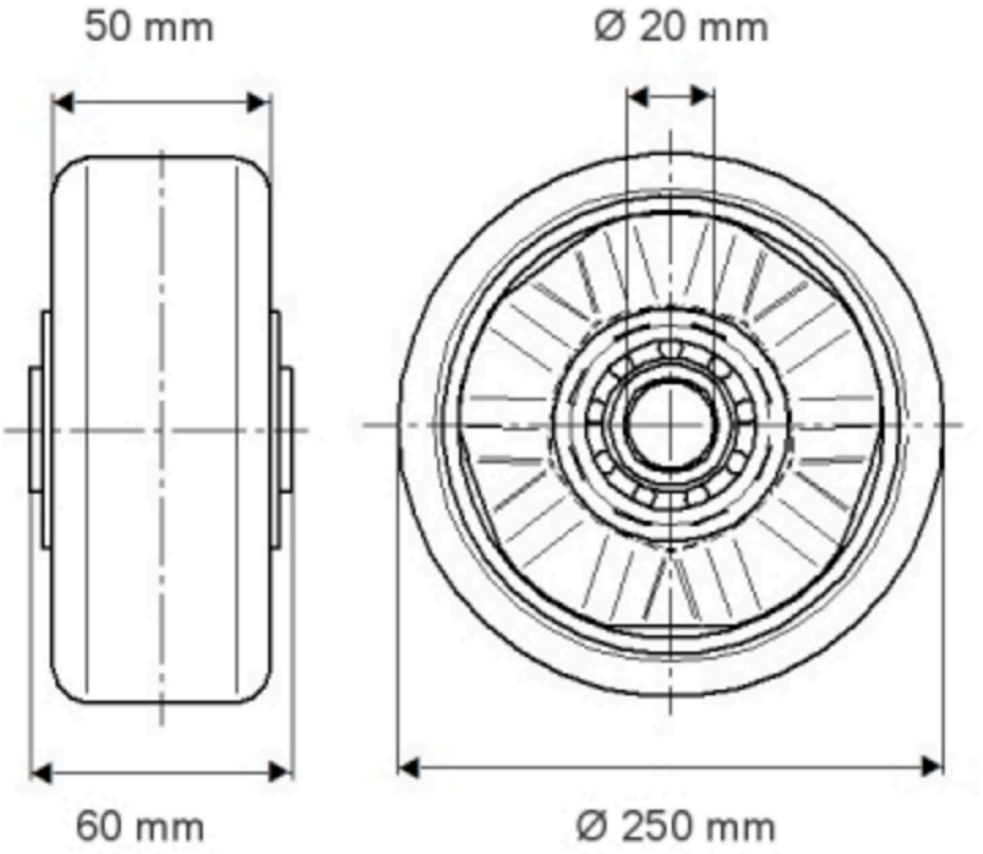

© Copyright 2026 TENTE International GmbH

ELASTECH

IFP 250x50-Ø20 HL60

EAN 4031582366780

Order number 00333557

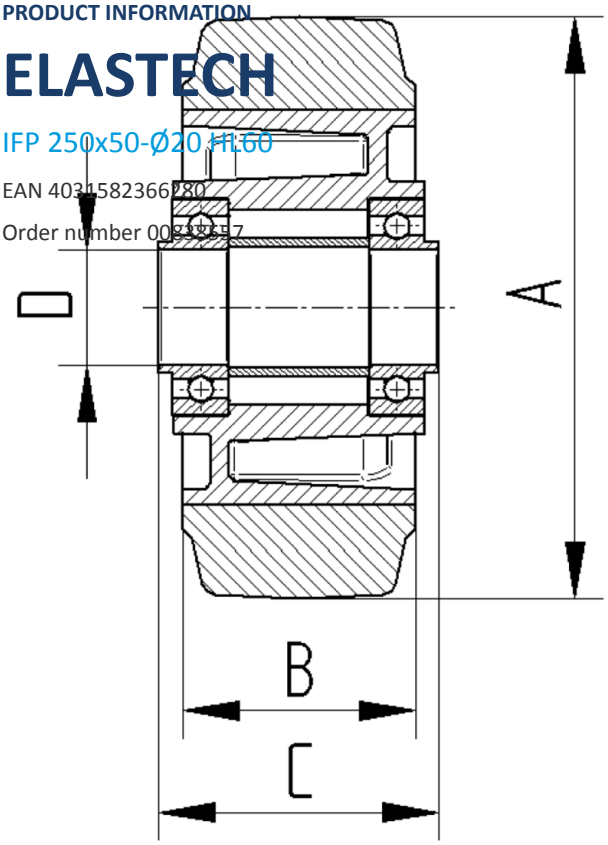

BETTER MOBILITY. BETTER LIFE.

© Copyright 2026 TENTE International GmbH