PRODUCT INFORMATION

# ELASTECH

## UFR160x46-Ø25 TFR

EAN 4031582390681

BETTER MOBILITY. BETTER LIFE.



Image may differ from the original product

### WHEEL

| | |
|---|---|
| Tread hardness | soft |
| Body material | Polyamide |
| Tread Material Mix | Elastic tire, non-marking, vulcanized |
| Bearing | Roller bearing |
| Threadguards | Without threadguard |
| Diameter | 160 mm |
| Tread width | 46 mm |
| Axle Hole Diameter | 25 mm |
| Hub Length | 58 mm |
| Hardness of tread (A) | 65 Shore A |

### PERFORMANCE

| | |
|---|---|
| Roll Performance | ●●●○○ |
| Movement Noise | ●●●●● |
| Attrition | ●●●○○ |
| Corrosion Resistance | ●●●○○ |

### CORE ATTRIBUTES

| | |
|---|---|
| Product Name | Elastech |
| Type | Wheel |
| Standard | EN12532 - Transport Equipment |
| Load capacity at 4 km/h | 300 kg |
| Electric Conductive | No |
| Stainless | No |
| Load capacity Static | 600 kg |
| Temperature range (Minimum) | -20 °C |
| Temperature range (Maximum) | 80 °C |
| Overall weight | 0.74 kg |

© Copyright 2026 TENTE International GmbH

# ELASTECH

## UFR160x46-Ø25 TFR

EAN 4031582390681

BETTER MOBILITY. BETTER LIFE.

### Product Drawings

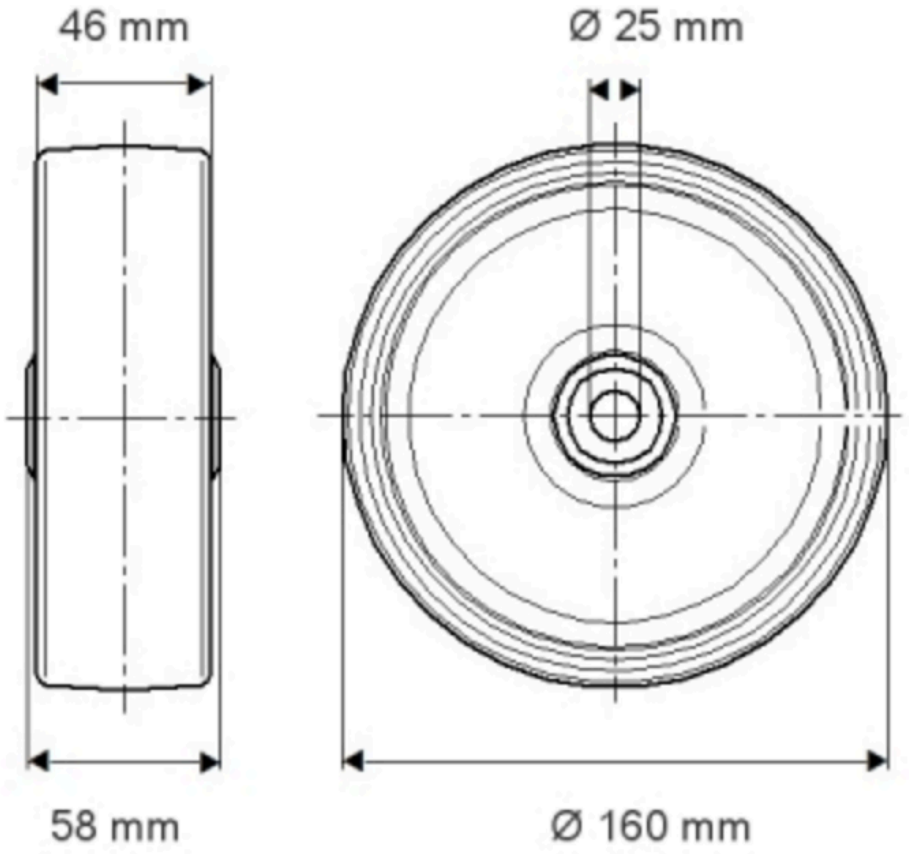


© Copyright 2026 TENTE International GmbH