PRODUCT INFORMATION

SUPRATECH

PJP 100x35-Ø8,3 HL45 65A 9011/5015

EAN 4031582410549



Image may differ from the original product

WHEEL

Tread hardness	soft
Body material	Polypropylene
Tread Material Mix	Thermoplastic rubber
Bearing	Precision ball bearing
Wheel Color	Graphite black (RAL9011)
Threadguards	With threadguard
Diameter	100 mm
Tread width	35 mm
Axle Hole Diameter	8.3 mm
Hub Length	45 mm
Body width	35 mm
Hardness of tread (A)	65 Shore A

PERFORMANCE

Roll Performance	●●●○○
Movement Noise	●●●●●
Attrition	●●●○○
Corrosion Resistance	●●●○○

CORE ATTRIBUTES

Product Name	Supratech
Type	Wheel
Standard	EN12532 - Transport Equipment
Load capacity at 4 km/h	125 kg
Electric Conductive	No
Stainless	No
Load capacity Static	250 kg
Temperature range (Minimum)	-20 °C
Temperature range (Maximum)	60 °C
Overall weight	0.24 kg

© Copyright 2026 TENTE International GmbH

SUPRATECH

PJP 100x35-Ø8,3 HL45 65A 9011/5015

EAN 4031582410549

Order number 00063522

Product Drawings

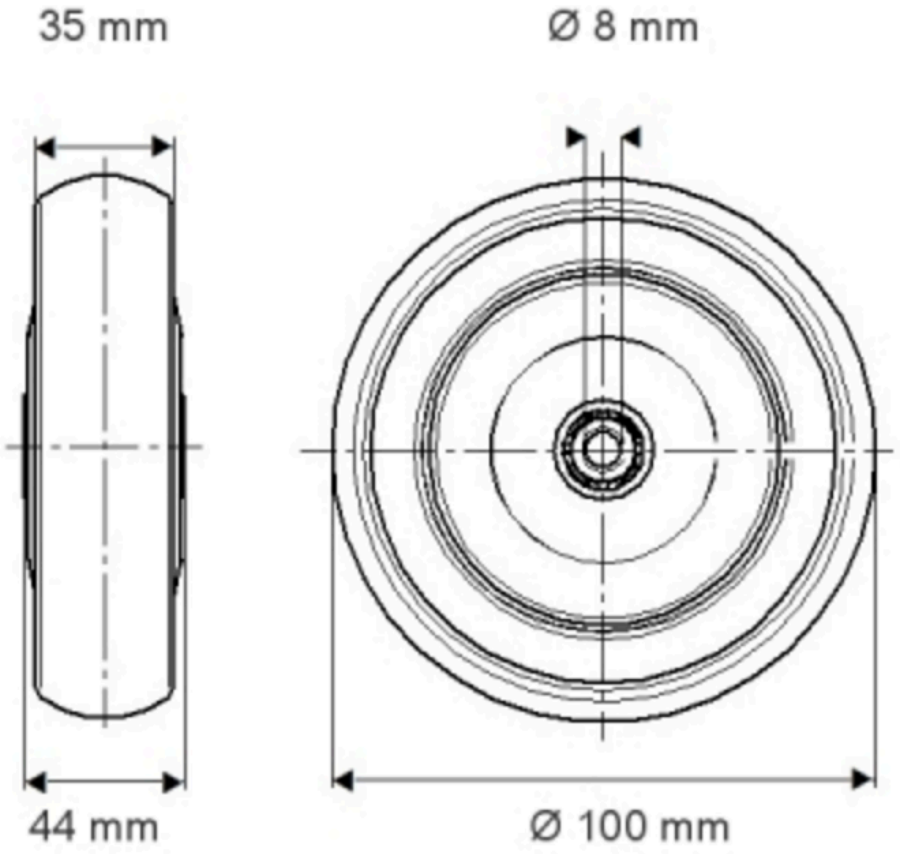

© Copyright 2026 TENTE International GmbH