# LINEA

## 5941UAP125R05-22 RAL9002

EAN 4031582369182



Image may differ from the original product

### PERFORMANCE

| | |
|---|---|
| Roll Performance | ●●●●● |
| Movement noise | ●●●○○ |
| Attrition | ●●●●○ |
| Corrosion resistance | ●●●●○ |

### CORE ATTRIBUTES

| | |
|---|---|
| Product name | Linea |
| Type | Swivel caster with directional lock |
| Standard | EN12530 - Devices Castors |
| Load capacity at 1.8 mph | 286.6 lb |
| Electric conductive | no |
| Stainless | no |
| Load capacity Static | 573.2 lb |
| Temperature range (Minimum) | 14 °F |
| Temperature range (Maximum) | 104 °F |
| Overall height | 5.71 in |
| Overall width | 3.23 in |
| Overall weight | 2.36 lb |

### HOUSING

| | |
|---|---|
| Housing Material | Polyamide |
| Fork shape | Twin wheel housing |
| Swivel bearing | Precision ball bearing |
| Housing Color | Gray white (RAL9002) |
| Offset | 1.57 in |
| Swivel radius | 5.08 in |
| Swivel interference | 10.16 in |
| Dome diameter | 2.05 in |

### WHEEL

| | |
|---|---|
| Body material | Polyamide |
| Tread material | Polyurethane, injected |
| Bearing | Precision ball bearing |
| Threadguards | With threadguard |
| Diameter | 4.92 in |
| Tread width | 0.79 in |
| Hardness of tread (A) | 92 Shore A |

### FITTING

| | |
|---|---|
| Fitting type | Solid stem, round |
| Bolt diameter | 0.87 in |
| Bolt length | 1.57 in |

Deutscher Designer Club

Interzum Award

IF Design Award

© Copyright 2026 TENTE International GmbH

# LINEA

5941UAP125R05-22 RAL9002

EAN 4031582369182

BETTER MOBILITY. BETTER LIFE.

## Product Drawings

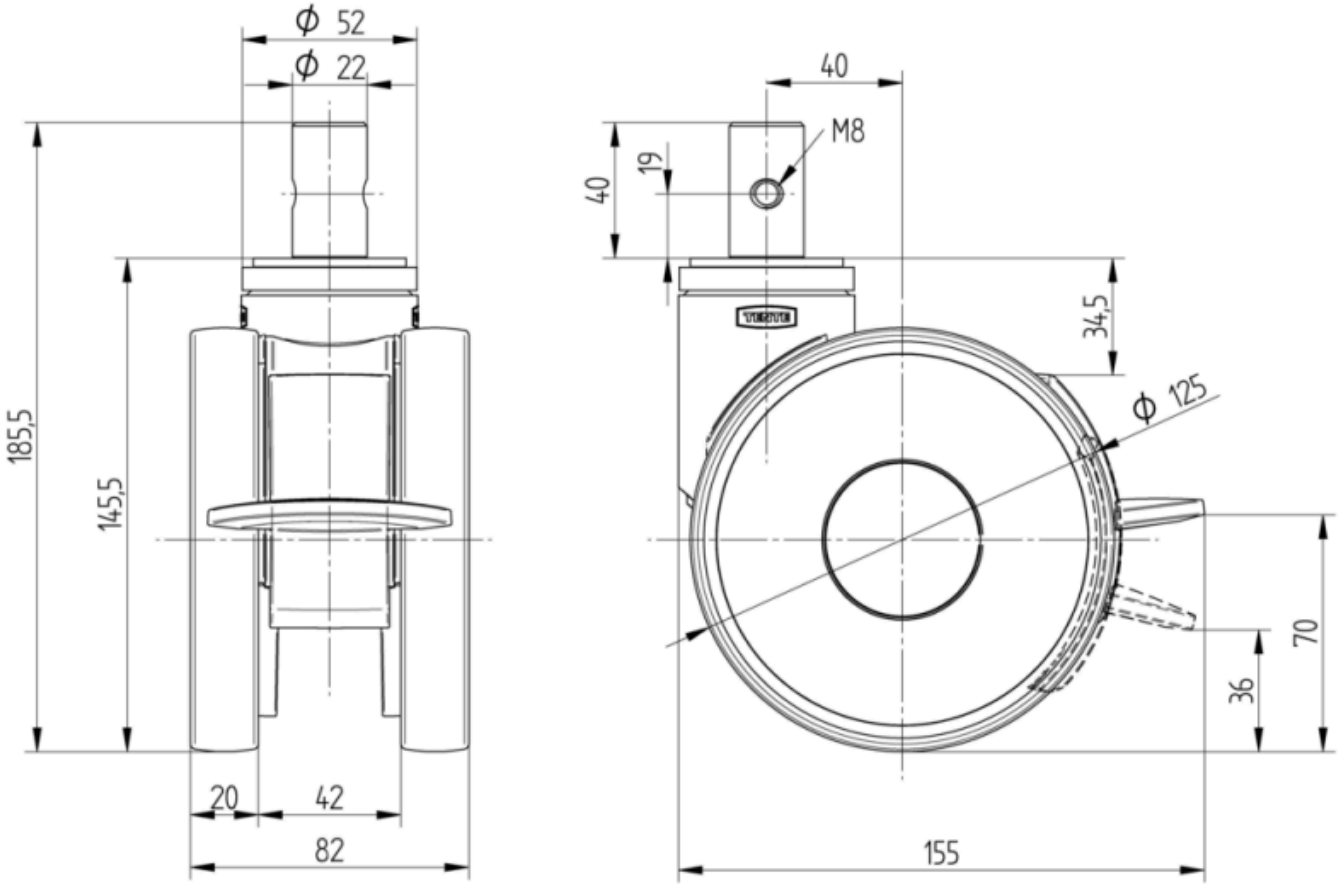


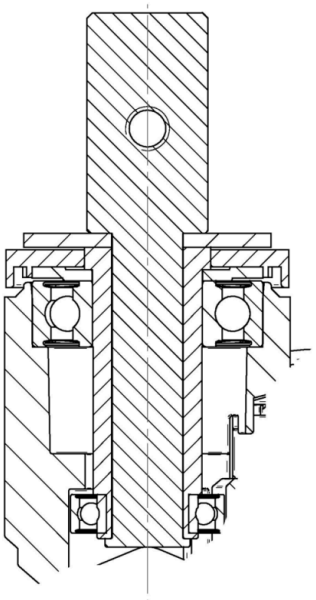

Deutscher Designer Club

Interzum Award

IF Design Award

© Copyright 2026 TENTE International GmbH