PRODUCT INFORMATION

ALPHA STAINLESS

8470PJD125P62 TFR

EAN 4031582386721



Image may differ from the original product

PERFORMANCE

Roll Performance	●●●○○
Movement Noise	●●●○○
Attrition	●●●○○
Corrosion Resistance	●●●●●

CORE ATTRIBUTES

Product Name	Alpha stainless
Type	Swivel castor
Standard	EN12532 - Transport Equipment
Load capacity at 4 km/h	100 kg
Electric Conductive	No
Stainless	Yes
Load capacity Static	200 kg
Temperature range (Minimum)	-20 °C
Temperature range (Maximum)	60 °C
Overall Height	155 mm
Overall weight	0.81 kg

HOUSING

Housing Material	Stainless steel, heavy
Fork shape	Broad
Swivel Bearing	Two ball races
Housing Color	Stainless steel
Offset	40 mm
Swivel radius	102.5 mm
Swivel interference	205 mm

WHEEL

Body material	Polypropylene
Tread Material Mix	Thermoplastic rubber
Bearing	Roller bearing, stainless
Axle	Screwed with nut
Diameter	125 mm
Tread width	32 mm
Hardness of tread (A)	87 Shore A

FITTING

Fitting type	Small rectangular plate
Plate length	105 mm
Plate width	85 mm
Plate hole length (Minimum)	77 mm
Plate hole length (Maximum)	80 mm
Plate hole width (Maximum)	60 mm
Plate hole diameter	9 mm

© Copyright 2026 TENTE International GmbH

ALPHA STAINLESS

8470PJD125P62 TFR

EAN 4031582386721

BETTER MOBILITY. BETTER LIFE.

Product Drawings

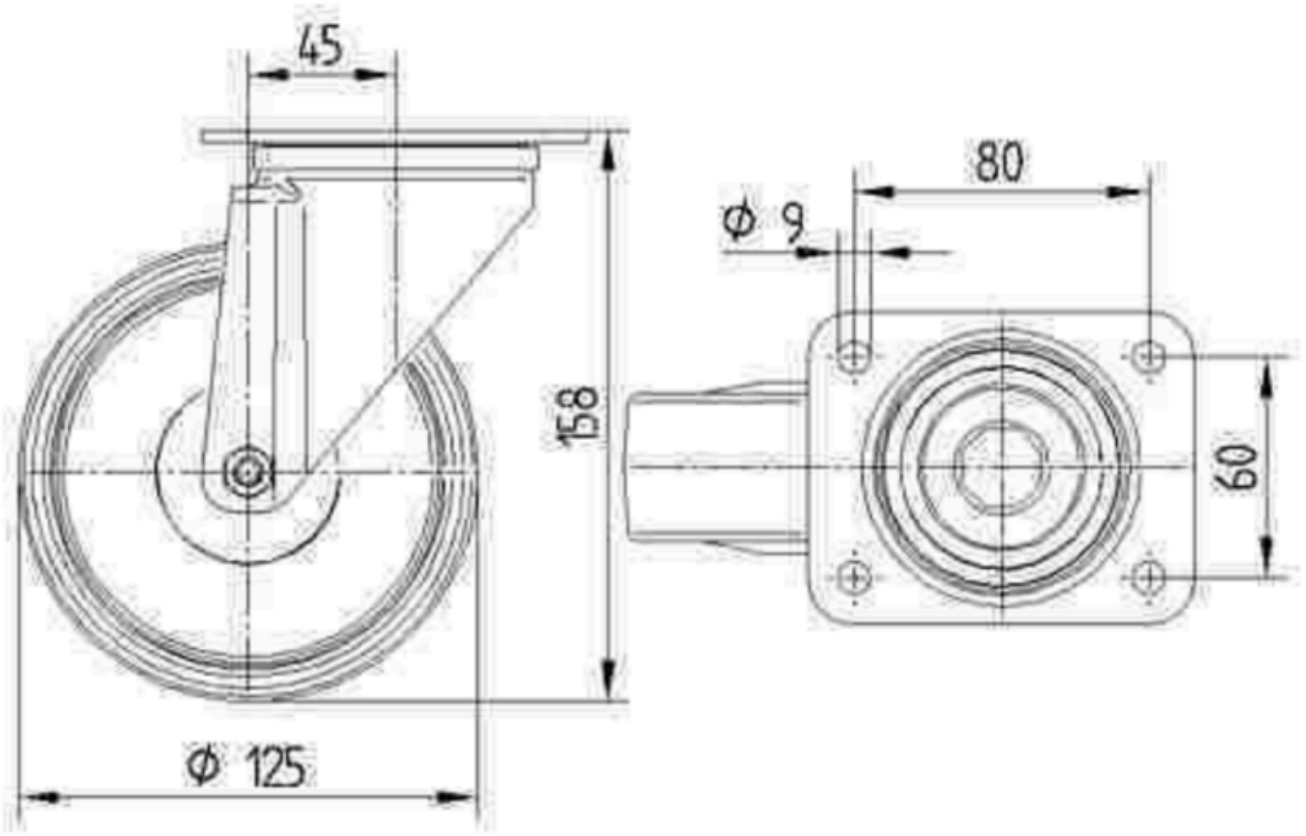

© Copyright 2026 TENTE International GmbH