PRODUCT INFORMATION

LINEA

5947UAC100R05-28 RAL9002

EAN 4031582352764



Image may differ from the original product

PERFORMANCE

Roll Performance	●●●●●
Movement noise	●●●○○
Attrition	●●●●○
Corrosion resistance	●●●●○

CORE ATTRIBUTES

Product name	Linea
Type	Swivel caster with total lock
Standard	EN12530 - Devices Castors
Load capacity at 1.8 mph	264.55 lb
Electric conductive	no
Stainless	Yes
Load capacity Static	529.11 lb
Temperature range (Minimum)	14 °F
Temperature range (Maximum)	104 °F
Overall height	4.72 in
Overall width	3.23 in
Overall weight	2.06 lb

HOUSING

Housing Material	Polyamide
Fork shape	Twin wheel housing
Swivel bearing	Precision ball bearing
Housing Color	Gray white (RAL9002)
Offset	1.26 in
Swivel radius	4.25 in
Swivel interference	8.5 in
Dome diameter	2.05 in

WHEEL

Body material	Polyamide
Tread material	Polyurethane, injected
Bearing	Precision ball bearing, stainless
Threadguards	With threadguard
Diameter	3.94 in
Tread width	0.79 in
Hardness of tread (A)	92 Shore A

FITTING

Fitting type	Solid stem, round
Bolt diameter	1.1 in
Bolt length	1.57 in

Deutscher Designer Club

Interzum Award

IF Design Award

© Copyright 2026 TENTE International GmbH

LINEA

5947UAC100R05-28 RAL9002

EAN 4031582352764

BETTER MOBILITY. BETTER LIFE.

Product Drawings

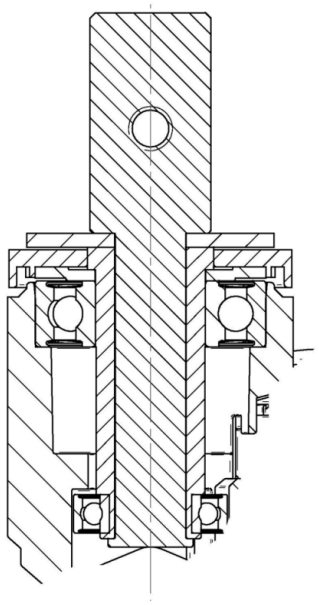

Deutscher Designer Club

Interzum Award

IF Design Award

© Copyright 2026 TENTE International GmbH