PRODUCT INFORMATION

ALPHA STAINLESS

8470UFD200P63

EAN 4031582346886

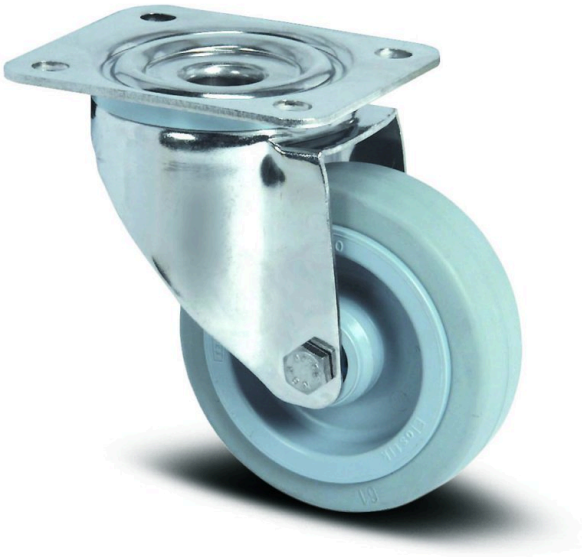

Image may differ from the original product

PERFORMANCE

Roll Performance	●●●●○
Movement Noise	●●●●○
Attrition	●●●○○
Corrosion Resistance	●●●●●

CORE ATTRIBUTES

Product Name	Alpha stainless
Type	Swivel castor
Standard	EN12532 - Transport Equipment
Load capacity at 4 km/h	400 kg
Electric Conductive	No
Stainless	Yes
Load capacity Static	800 kg
Temperature range (Minimum)	-20 °C
Temperature range (Maximum)	80 °C
Overall Height	240 mm
Overall width	96 mm
Overall weight	2.62 kg

HOUSING

Housing Material	Stainless steel, heavy
Fork shape	Broad
Swivel Bearing	Two ball races
Housing Color	Stainless steel
Offset	55 mm
Swivel radius	155 mm
Swivel interference	310 mm
Dome diameter	96 mm

WHEEL

Tread hardness	soft
Body material	Polyamide
Tread Material Mix	Elastic tire, non-marking, vulcanized
Bearing	Roller bearing, stainless
Axle	Screwed with nut
Wheel Color	Silver grey (RAL7001)
Diameter	200 mm
Tread width	46 mm
Body width	46 mm
Hardness of tread (A)	63 Shore A

FITTING

Fitting type	Medium rectangular plate
Plate length	137 mm
Plate width	105 mm
Plate hole length (Minimum)	75 mm
Plate hole length (Maximum)	80 mm
Plate hole width (Minimum)	75 mm
Plate hole width (Maximum)	105 mm
Plate hole diameter	11 mm

© Copyright 2026 TENTE International GmbH

ALPHA STAINLESS

8470UFD200P63

EAN 4031582346886

Order number 00035540

Product Drawings

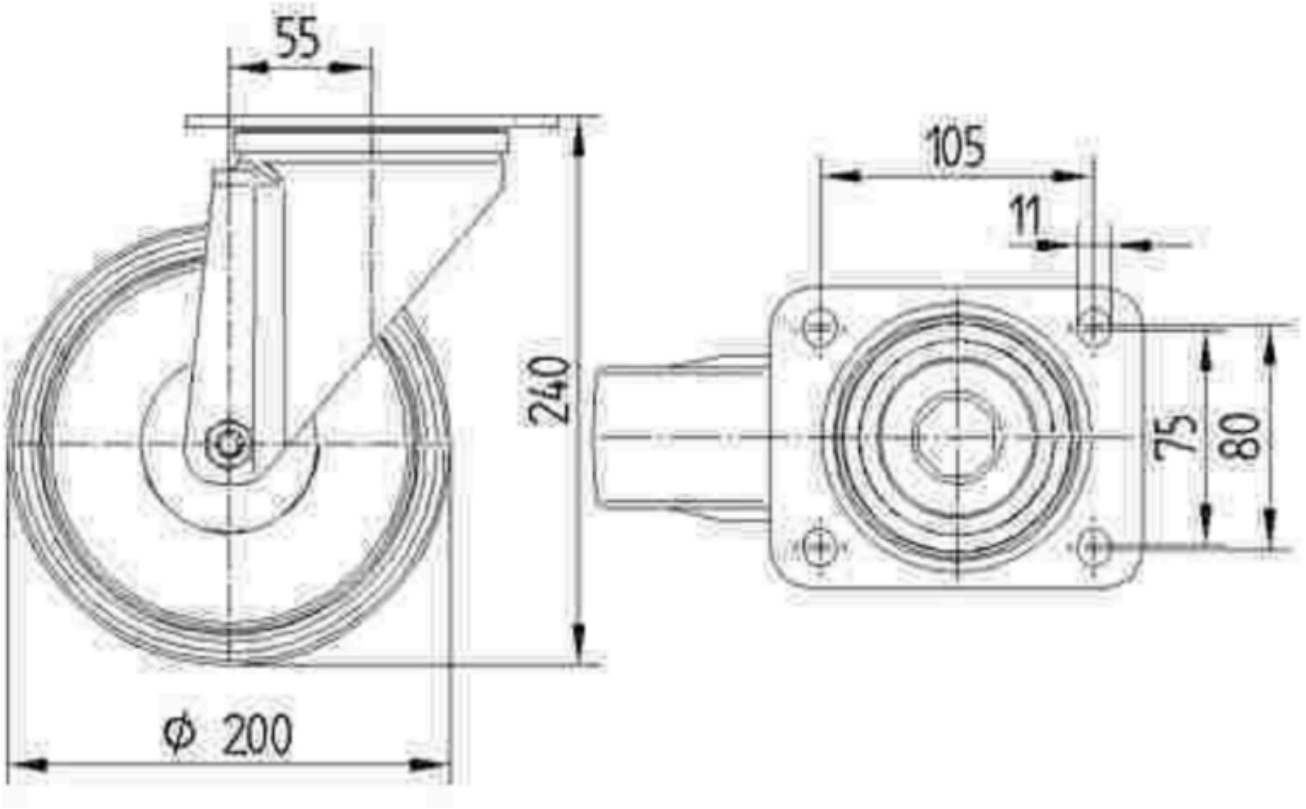

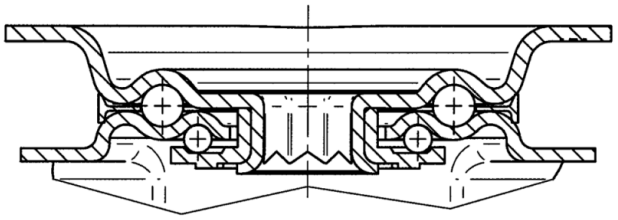

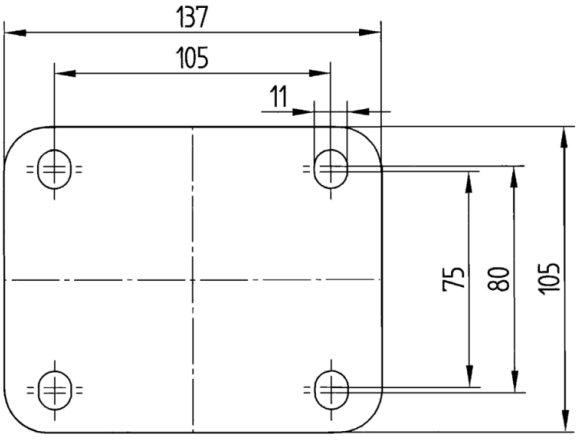

© Copyright 2026 TENTE International GmbH