PRODUCT INFORMATION

SUPRATECH

PJR 100x32-Ø12 HL44,4

EAN 4031582320527

BETTER MOBILITY. BETTER LIFE.



Image may differ from the original product

WHEEL

Body material	Polypropylene
Tread material	Thermoplastic rubber
Bearing	Roller bearing
Wheel color	Silver gray (RAL7001)
Threadguards	Without threadguard
Diameter	3.94 in
Tread width	1.26 in
Axle hole diameter	0.47 in
Hub length	1.75 in
Body width	1.26 in
Hardness of tread (A)	87 Shore A

PERFORMANCE

Roll Performance	●●●○○
Movement noise	●●●●○
Attrition	●●●○○
Corrosion resistance	●●●○○

CORE ATTRIBUTES

Product name	Supratech
Type	Wheel
Standard	EN12532 - Transport Equipment
Load capacity at 2.5 mph	176.37 lb
Electric conductive	no
Stainless	no
Load capacity Static	352.74 lb
Temperature range (Minimum)	-4 °F
Temperature range (Maximum)	140 °F
Overall weight	0.38 lb

© Copyright 2026 TENTE International GmbH

SUPRATECH

PJR 100x32-Ø12 HL44,4

EAN 4031582320527

Order number 00030822

Product Drawings

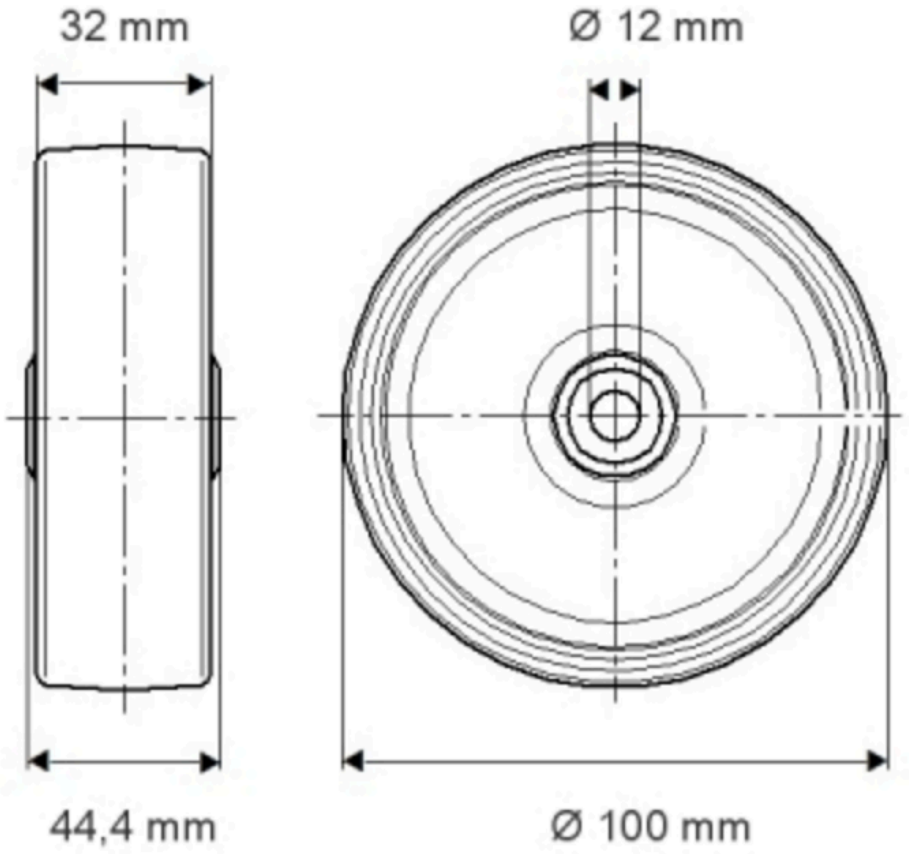

© Copyright 2026 TENTE International GmbH