PRODUCT INFORMATION

ZETA

4681ITP125P63 SH80XL

EAN 4031582400434



Image may differ from the original product

PERFORMANCE

Roll Performance	●●●●○
Movement noise	●●●●○
Attrition	●●●●○
Corrosion resistance	●●●○○

CORE ATTRIBUTES

Product name	Zeta
Type	Swivel caster with directional lock
Standard	EN12532 - Transport Equipment
Load capacity at 2.5 mph	881.85 lb
Load capacity at 3.7 mph	705.48 lb
Electric conductive	no
Stainless	no
Load capacity Static	1763.7 lb
Temperature range (Minimum)	31.4 °F
Overall height	6.46 in
Overall weight	6.3 lb

HOUSING

Housing Material	Steel sheet, very heavy
Fork shape	Broad, reinforced
Swivel bearing	Two ball races, reinforced or stainless
Housing Color	Blue passivated
Offset	2.17 in
Swivel interference	14.17 in

WHEEL

Body material	Aluminum
Tread material	Polyurethane, casted
Bearing	Precision ball bearing
Axle	Screwed with nut
Threadguards	Without threadguard
Diameter	4.92 in
Tread width	1.97 in
Hardness of tread (A)	80 Shore A

FITTING

Fitting type	Rectangular plate
Plate length	5.39 in
Plate width	4.13 in
Plate hole length (Maximum)	4.13 in
Plate hole width (Minimum)	2.95 in
Plate hole width (Maximum)	3.15 in
Plate hole diameter	0.43 in

© Copyright 2026 TENTE International GmbH

ZETA

4681ITP125P63 SH80XL

EAN 4031582400434

Product Drawings

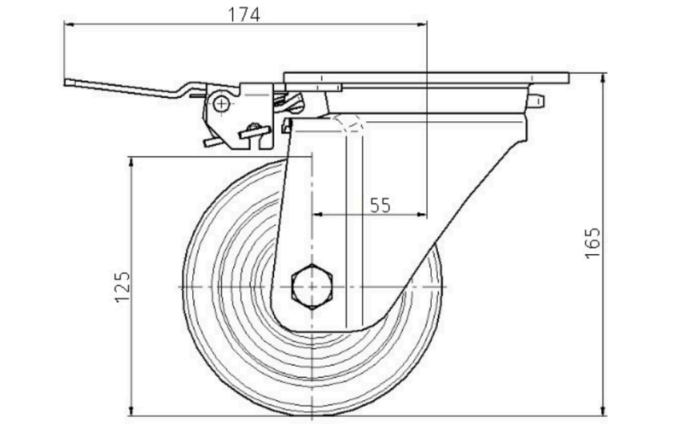

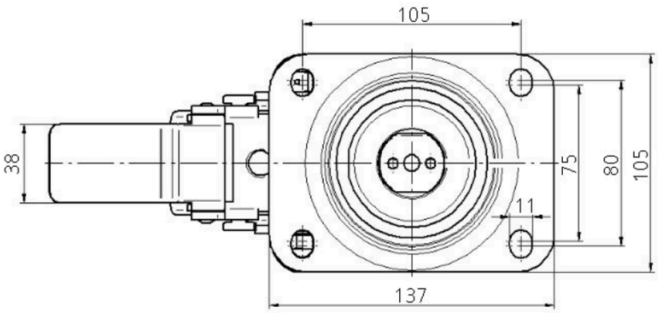

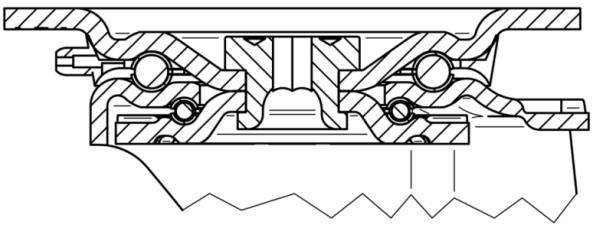

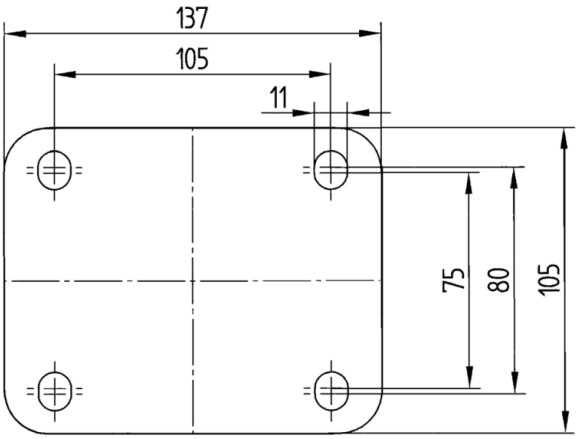

© Copyright 2026 TENTE International GmbH