PRODUCT INFORMATION

PURETECH

Directional lock 4681/125-250 P63

EAN 4031582438130



Image may differ from the original product

PERFORMANCE

Roll Performance	● ● ● ○ ○
Movement Noise	● ● ● ○ ○
Attrition	● ● ● ○ ○
Corrosion Resistance	● ● ● ○ ○

CORE ATTRIBUTES

Product Name	Puretech
Type	Accessory
Electric Conductive	No
Stainless	No
Overall weight	0.27 kg

© Copyright 2026 TENTE International GmbH

PURETECH

Directional lock 4681/125-250 P63

EAN 4031582438130

BETTER MOBILITY. BETTER LIFE.

Product Drawings

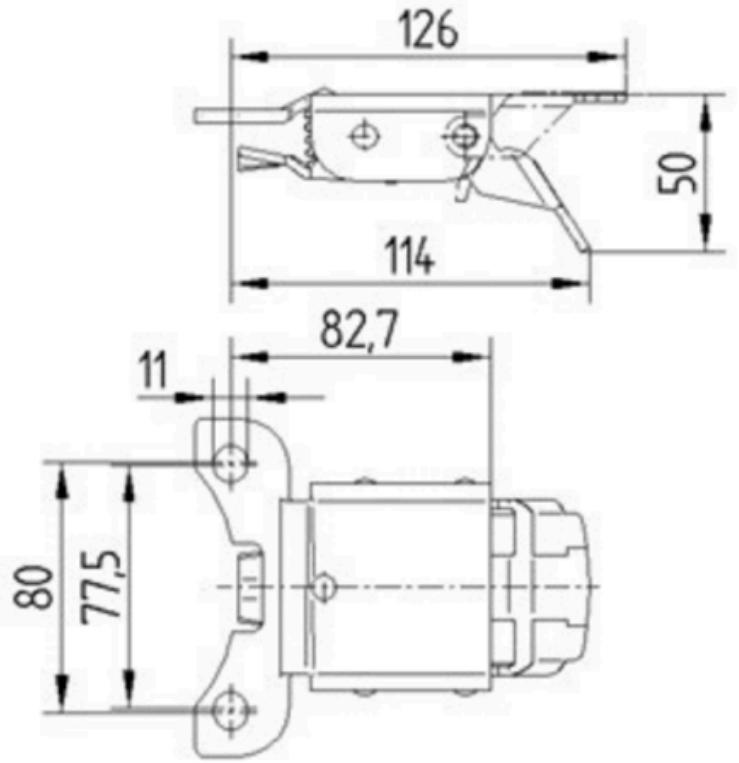

© Copyright 2026 TENTE International GmbH