PRODUCT INFORMATION

AGILA TWIN

2970PIO075P50

EAN 4031582362275

BETTER MOBILITY. BETTER LIFE.



Image may differ from the original product

PERFORMANCE

Roll Performance	●●●○○
Movement noise	●●●○○
Attrition	●●●○○
Corrosion resistance	●●●○○

CORE ATTRIBUTES

Product name	Agila twin
Type	Swivel caster
Standard	EN12530 - Devices Castors
Load capacity at 1.8 mph	176.37 lb
Electric conductive	no
Stainless	no
Load capacity Static	352.74 lb
Temperature range (Minimum)	-4 °F
Temperature range (Maximum)	140 °F
Overall height	4.02 in
Overall weight	1.23 lb

HOUSING

Housing Material	Steel sheet, medium
Fork shape	Twin wheel housing
Swivel bearing	Two ball races
Offset	1.24 in
Swivel radius	2.71 in
Swivel interference	5.43 in

WHEEL

Body material	Polypropylene
Tread material	Solid rubber, non-marking
Bearing	Plain bearing
Threadguards	Without threadguard
Diameter	2.95 in
Tread width	0.98 in
Hardness of tread (A)	80 Shore A

FITTING

Fitting type	Rectangular plate
Plate length	3.03 in
Plate width	2.64 in
Plate hole length (Minimum)	2.2 in
Plate hole length (Maximum)	2.42 in
Plate hole width (Minimum)	1.83 in
Plate hole width (Maximum)	2.03 in
Plate hole diameter	0.33 in

© Copyright 2026 TENTE International GmbH

AGILA TWIN

2970PIO075P50

EAN 4031582362275

BETTER MOBILITY. BETTER LIFE.

Product Drawings

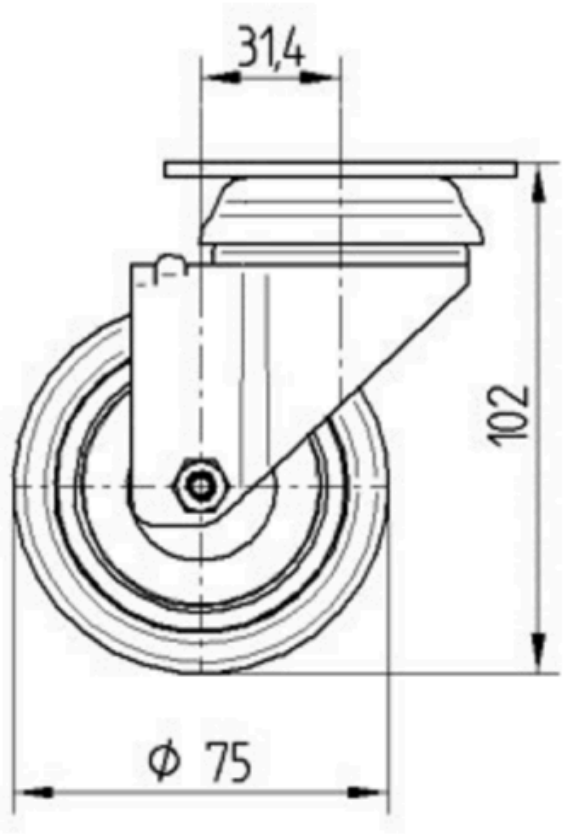

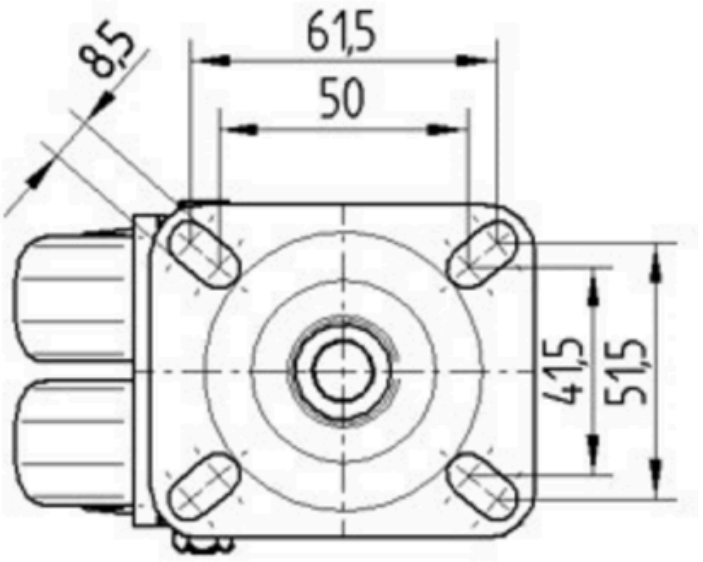

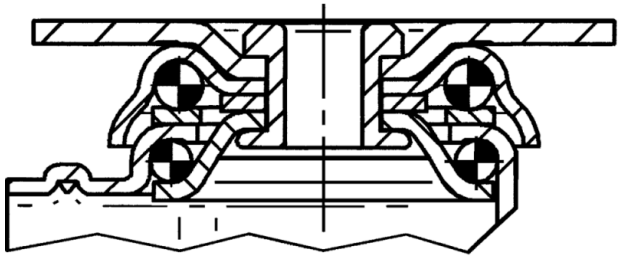

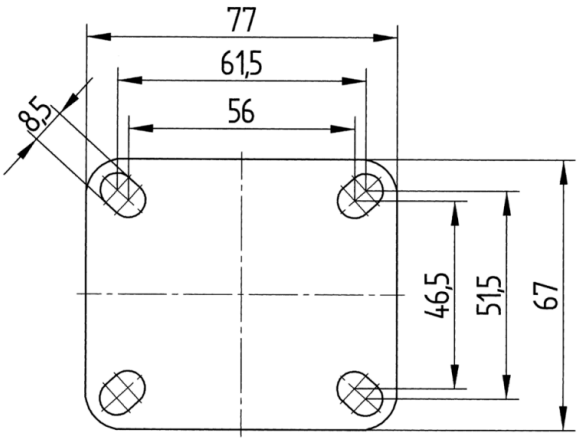

© Copyright 2026 TENTE International GmbH