PRODUCT INFORMATION

CHANGE LEVER

Schalthebel 24S45 o. Gew. Stift

EAN 4031582322095



Image may differ from the original product

PERFORMANCE

Corrosion Resistance	●●●○○

CORE ATTRIBUTES

Product Name	Change lever
Type	Accessory
Electric Conductive	No
Stainless	No
Overall weight	0.12 kg

© Copyright 2026 TENTE International GmbH

CHANGE LEVER

Schalthebel 24S45 o. Gew. Stift

EAN 4031582322095

Order number 00002878

Product Drawings

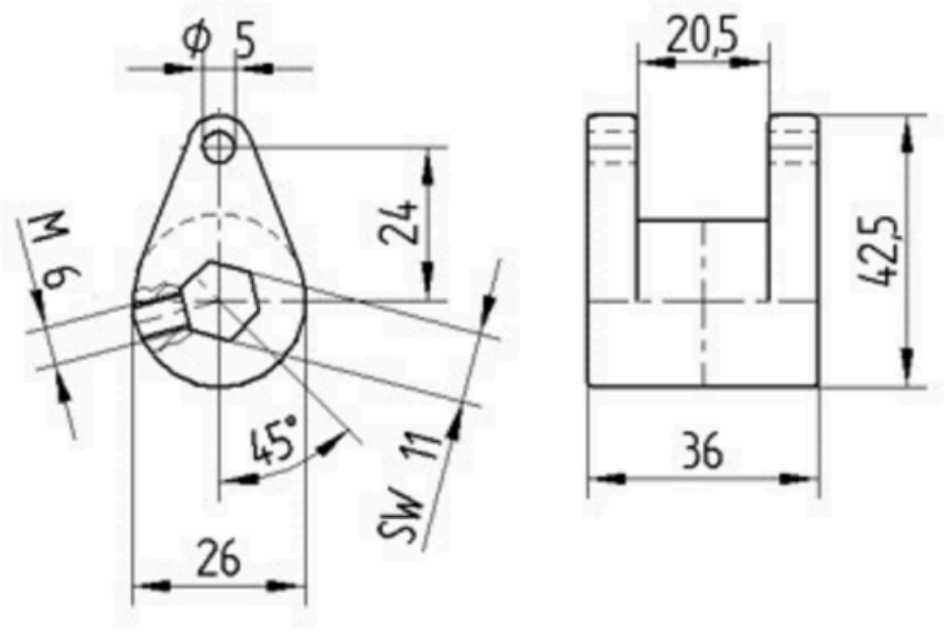

© Copyright 2026 TENTE International GmbH