PRODUCT INFORMATION

NOVATECH

ITB 125X50-Ø20 HL54

EAN 4031582397871
Order number 00861397

BETTER MOBILITY. BETTER LIFE.

Image may differ from the original product

WHEEL

Body material	Aluminium
Tread material	Polyurethane, casted
Bearing	Bore with keyway
Wheel color	Honey yellow (RAL1005)
Threadguards	Without threadguard
Diameter	125 mm
Tread width	50 mm
Axle hole diameter	20 mm
Hub length	54 mm
Body width	50 mm
Hardness of tread (A)	92 Shore A
Hardness of tread (D)	42 Shore D

PERFORMANCE

Roll performance	●●●●○
Movement noise	●●●○○
Attrition	●●●●○
Corrosion resistance	●●●○○

CORE ATTRIBUTES

Product name	Novatech
Type	Wheel
Standard	EN12532 - Transport Equipment
Load capacity at 4 km/h	500 kg
Load capacity at 6 km/h	400 kg
Load capacity Static	1000 kg
Temperature range (Minimum)	-10 °C
Temperature range (Maximum)	60 °C
Overall weight	0.785 kg

© Copyright 2026 TENTE International GmbH

NOVATECH

ITB 125X50-Ø20 HL54

EAN 4031582397871
Order number 00861397

BETTER MOBILITY. BETTER LIFE.
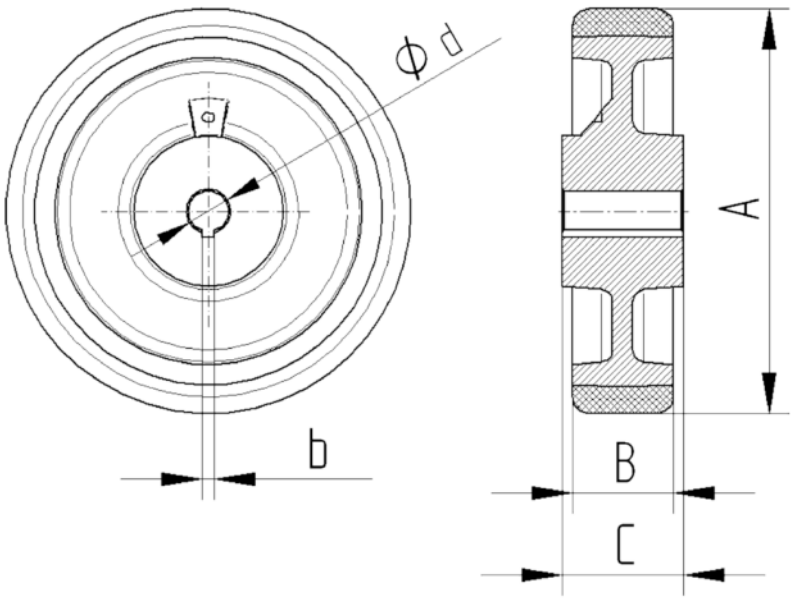
TECHNICAL DRAWINGS