PRODUCT INFORMATION

INTEGRAL

2044XSX150R26-28D45 RAL 9002 4xM8

EAN 4031582443202



Image may differ from the original product

PERFORMANCE

Roll Performance	●●●○○
Movement Noise	●●●○○
Attrition	●●●●○
Corrosion Resistance	●●●○○

CORE ATTRIBUTES

Product Name	Integral
Type	Swivel castor with central, total or directional lock
Standard	EN12531 - Hospital Bed Castors
Load capacity at 3 km/h	150 kg
Load capacity at 4 km/h	150 kg
Electric Conductive	Yes
Stainless	No
Load capacity Static	300 kg
Temperature range (Minimum)	-25 °C
Temperature range (Maximum)	80 °C
Overall Height	183 mm
Overall width	62 mm
Overall weight	1.11 kg
Certification	Tested and monitored by TÜV Süd

HOUSING

Housing Material	Steel sheet, medium
Fork shape	Closed
Swivel Bearing	Precision ball bearing
Housing Color	Grey white (RAL9002)
Offset	40 mm
Swivel radius	115 mm
Swivel interference	230 mm
Dome diameter	62 mm

WHEEL

Body material	Polyamide, electric conductive
Tread Material Mix	Polyurethane, injected, electric-conductive
Bearing	Precision ball bearing, sealed
Tread Color	Slate grey (similar RAL7015)
Wheel Color	Slate grey (RAL7015)
Threadguards	Integrated threadguard
Diameter	150 mm
Tread width	32 mm
Body width	32 mm
Hardness of tread (A)	91 Shore A
Hardness of tread (D)	40 Shore D

FITTING

Brake cam	D-profile cam
Fitting type	Stem with cam hole for profile bars
Bolt diameter	28 mm
Bolt length	96 mm
Bolt thread position	19 mm
Bolt mounting holes quantity	4
Hint	Washable beds must be sealed in the fitting area by the hospital bed manufacturer.

IF Design Award

Red Dot Design Award

© Copyright 2026 TENTE International GmbH

INTEGRAL

2044XSX150R26-28D45 RAL 9002 4xM8

EAN 4031582443202

Order number 00030615

Product Drawings

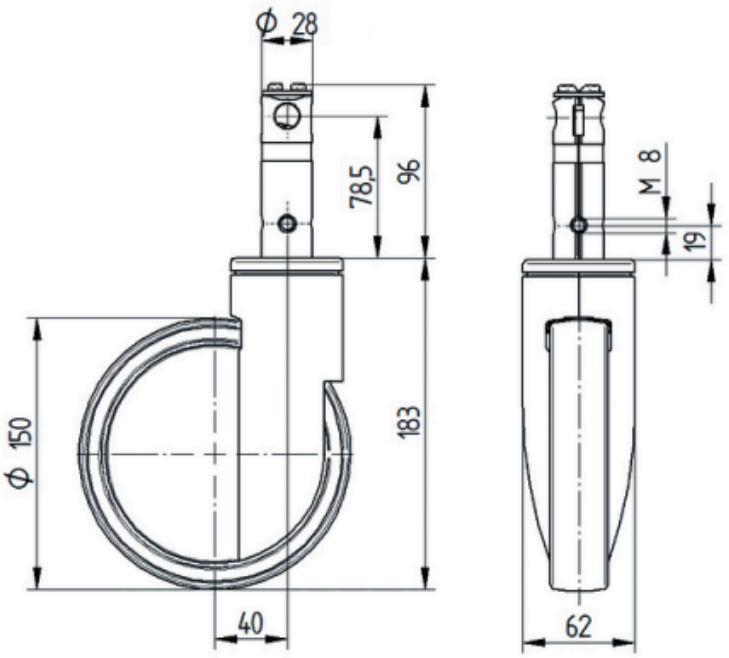

IF Design Award

Red Dot Design Award

© Copyright 2026 TENTE International GmbH