PRODUCT INFORMATION

# BASETECH

## POR100x36-Ø12

EAN 4031582419016

BETTER MOBILITY. BETTER LIFE.



Image may differ from the original product

### WHEEL

| | |
|---|---|
| Body material | Polypropylene |
| Tread Material Mix | Identical with wheel body |
| Bearing | Roller bearing |
| Threadguards | Without threadguard |
| Diameter | 100 mm |
| Tread width | 36 mm |
| Axle Hole Diameter | 12 mm |
| Hub Length | 44.4 mm |
| Hardness of tread (D) | 65 Shore D |

### PERFORMANCE

| | |
|---|---|
| Roll Performance | ●●●○○ |
| Movement Noise | ●●●○○ |
| Attrition | ●●●●● |
| Corrosion Resistance | ●●●○○ |

### CORE ATTRIBUTES

| | |
|---|---|
| Product Name | Basetech |
| Type | Wheel |
| Standard | EN12532 - Transport Equipment |
| Load capacity at 4 km/h | 160 kg |
| Electric Conductive | No |
| Stainless | No |
| Load capacity Static | 320 kg |
| Temperature range (Minimum) | -20 °C |
| Temperature range (Maximum) | 60 °C |
| Overall weight | 0.14 kg |

© Copyright 2026 TENTE International GmbH

# BASETECH

POR100x36-Ø12

EAN 4031582419016

BETTER MOBILITY. BETTER LIFE.

## Product Drawings

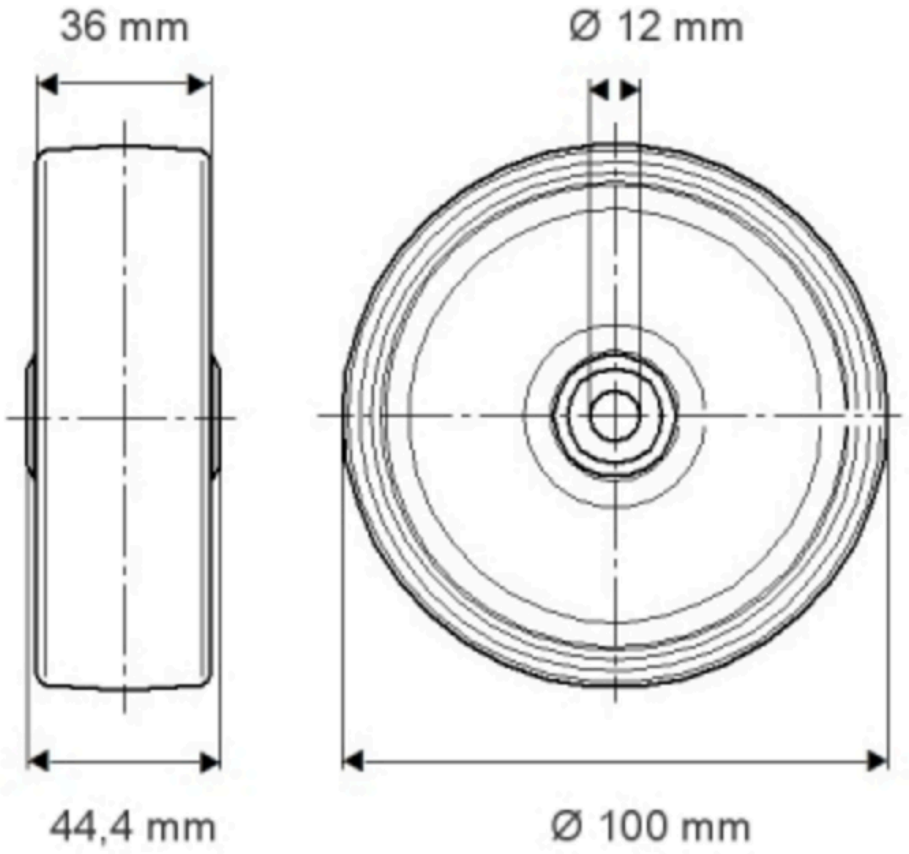


© Copyright 2026 TENTE International GmbH