PRODUCT INFORMATION

INTEGRAL

2044UAP125R26-28S45 D 9002 4xM8

EAN 4031582300161



Image may differ from the original product

PERFORMANCE

Roll Performance	●●●○○
Movement Noise	●●●○○
Attrition	●●●●○
Corrosion Resistance	●●●○○

CORE ATTRIBUTES

Product Name	Integral
Type	Swivel castor with central, total or directional lock
Standard	EN12531 - Hospital Bed Castors
Load capacity at 3 km/h	150 kg
Load capacity at 4 km/h	150 kg
Electric Conductive	No
Stainless	No
Load capacity Static	450 kg
Temperature range (Minimum)	-25 °C
Temperature range (Maximum)	80 °C
Overall Height	158 mm
Overall width	62 mm
Overall weight	0.98 kg
Certification	Tested and monitored by TÜV Süd

HOUSING

Housing Material	Steel sheet, medium
Fork shape	Closed
Swivel Bearing	Precision ball bearing
Housing Color	Grey white (RAL9002)
Offset	35 mm
Swivel radius	97.5 mm
Swivel interference	195 mm
Dome diameter	62 mm

WHEEL

Body material	Polyamide
Tread Material Mix	Polyurethane, injected
Bearing	Precision ball bearing
Tread Color	Slate grey (RAL7015)
Wheel Color	Slate grey (RAL7015)
Threadguards	Integrated threadguard
Diameter	125 mm
Tread width	32 mm
Body width	32 mm
Hardness of tread (A)	92 Shore A
Hardness of tread (D)	42 Shore D

FITTING

Brake cam	hex cam
Fitting type	Stem with cam hole for profile bars
Bolt diameter	28 mm
Bolt length	96 mm
Bolt thread position	19 mm
Bolt mounting holes quantity	4

IF Design Award

Red Dot Design Award

© Copyright 2026 TENTE International GmbH

INTEGRAL

2044UAP125R26-28S45 D 9002 4xM8

EAN 4031582300161

Order number 00035722

Product Drawings

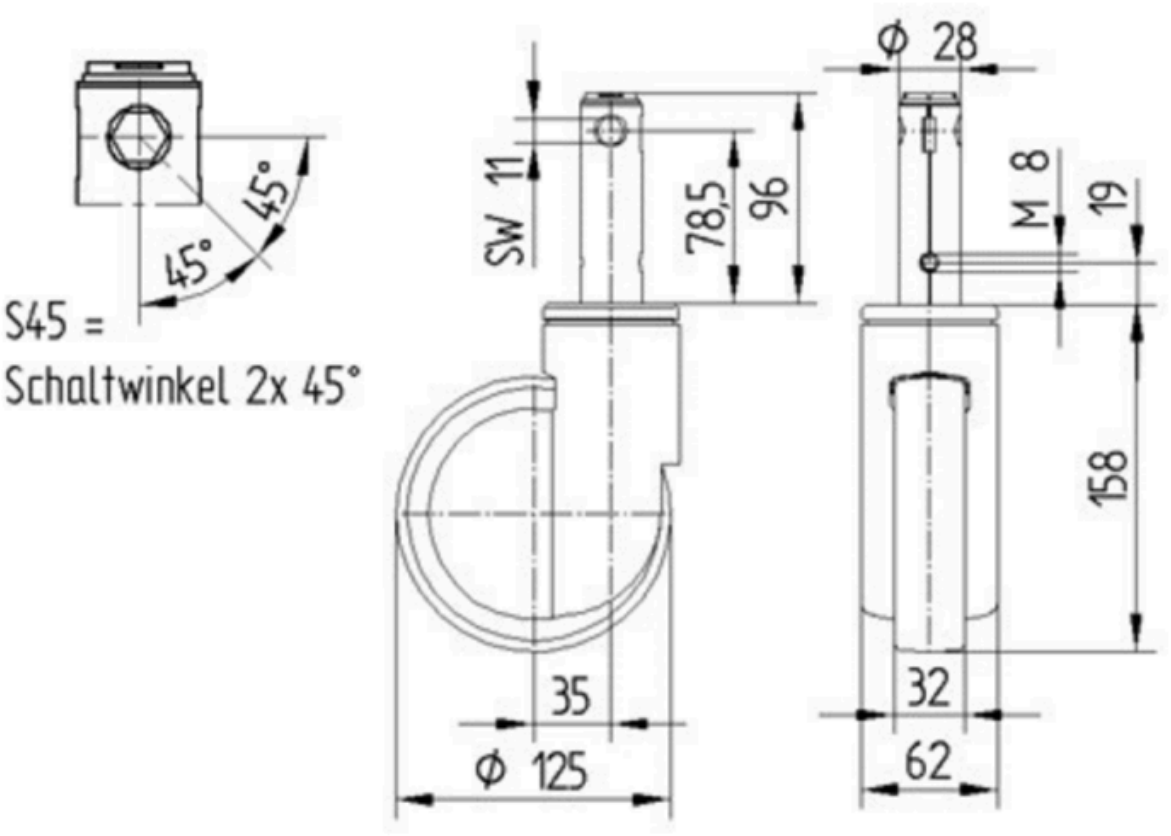

IF Design Award

Red Dot Design Award

© Copyright 2026 TENTE International GmbH