PRODUCT INFORMATION

DURATECH

TOP 080x60-Ø20 HL60

EAN 4031582365436



Image may differ from the original product

PERFORMANCE

Roll Performance	●●●●●
Movement Noise	●●○○○
Attrition	●●●●●
Corrosion Resistance	●●●○○

CORE ATTRIBUTES

Product Name	Duratech
Type	Wheel
Standard	EN12533 - Heavy Duty Castors
Load capacity at 4 km/h	600 kg
Load capacity at 6 km/h	500 kg
Electric Conductive	No
Stainless	No
Load capacity Static	1000 kg
Temperature range (Minimum)	-40 °C
Temperature range (Maximum)	80 °C
Overall weight	0.44 kg

WHEEL

Body material	Polyamide, heavy
Tread Material Mix	Identical with wheel body
Bearing	Precision ball bearing
Wheel Color	Natural white
Threadguards	Without threadguard
Diameter	80 mm
Tread width	60 mm
Axle Hole Diameter	20 mm
Hub Length	60 mm
Body width	60 mm
Hardness of tread (D)	75 Shore D
Bearing type	6204

© Copyright 2026 TENTE International GmbH

DURATECH

TOP 080x60-Ø20 HL60

EAN 4031582365436

Order number 00860864

Product Drawings

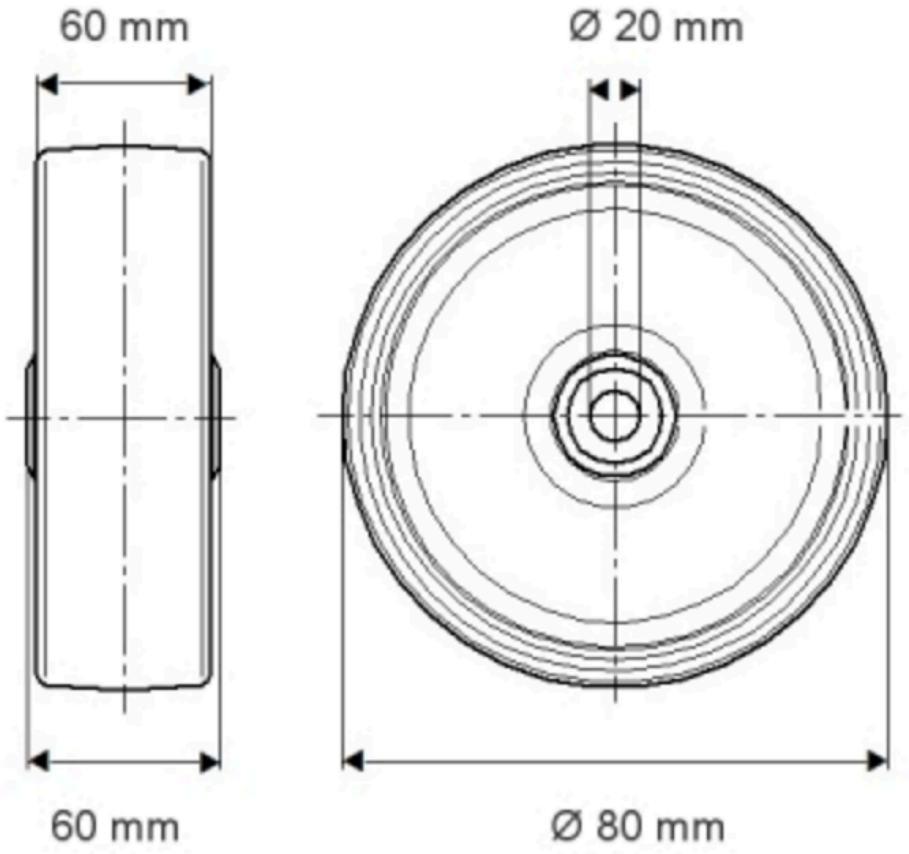

© Copyright 2026 TENTE International GmbH

DURATECH

TOP 080x60-Ø20 HL60

EAN 4031582365436

Order number 00801464

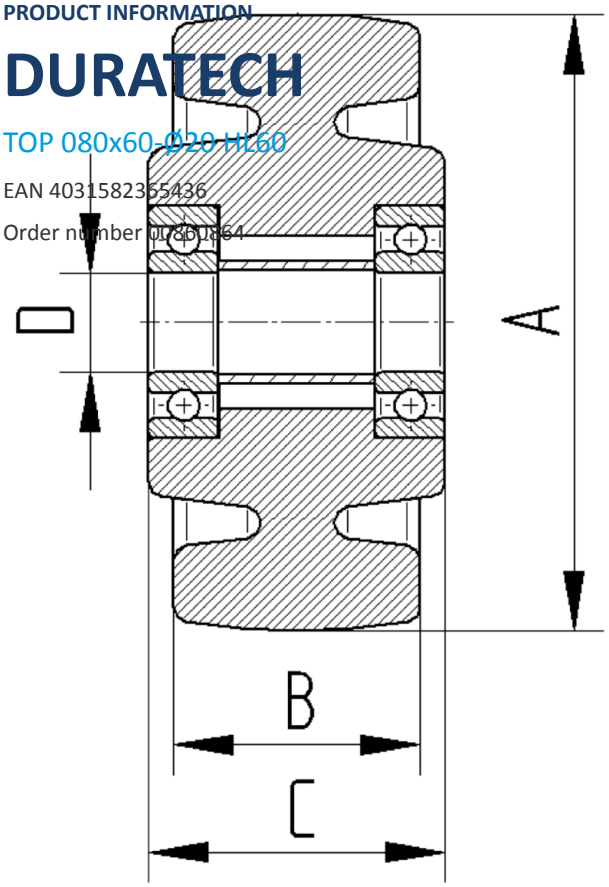

© Copyright 2026 TENTE International GmbH