PRODUCT INFORMATION

AGILA TWIN

2970YGO075P50

EAN 4031582357721

BETTER MOBILITY. BETTER LIFE.



Image may differ from the original product

PERFORMANCE

Roll Performance	●●●○○
Movement Noise	●●●○○
Attrition	●●●○○
Corrosion Resistance	●●●○○

CORE ATTRIBUTES

Product Name	Agila twin
Type	Swivel castor
Standard	EN12530 - Devices Castors
Load capacity at 3 km/h	100 kg
Electric Conductive	Yes
Stainless	No
Load capacity Static	200 kg
Temperature range (Minimum)	-20 °C
Temperature range (Maximum)	60 °C
Overall Height	102 mm
Overall weight	0.56 kg

HOUSING

Housing Material	Steel sheet, medium
Fork shape	Twin wheel housing
Swivel Bearing	Two ball races
Offset	31.4 mm
Swivel radius	68.9 mm
Swivel interference	137.8 mm

WHEEL

Body material	Polypropylene, electric conductive
Tread Material Mix	Thermoplastic rubber, electric-conductive
Bearing	Plain bearing
Threadguards	Without threadguard
Diameter	75 mm
Tread width	25 mm
Hardness of tread (A)	87 Shore A

FITTING

Fitting type	Rectangular plate
Plate length	77 mm
Plate width	67 mm
Plate hole length (Minimum)	56 mm
Plate hole length (Maximum)	61.5 mm
Plate hole width (Minimum)	46.5 mm
Plate hole width (Maximum)	51.5 mm
Plate hole diameter	8.5 mm

© Copyright 2026 TENTE International GmbH

AGILA TWIN

2970YGO075P50

EAN 4031582357721

BETTER MOBILITY. BETTER LIFE.

Product Drawings

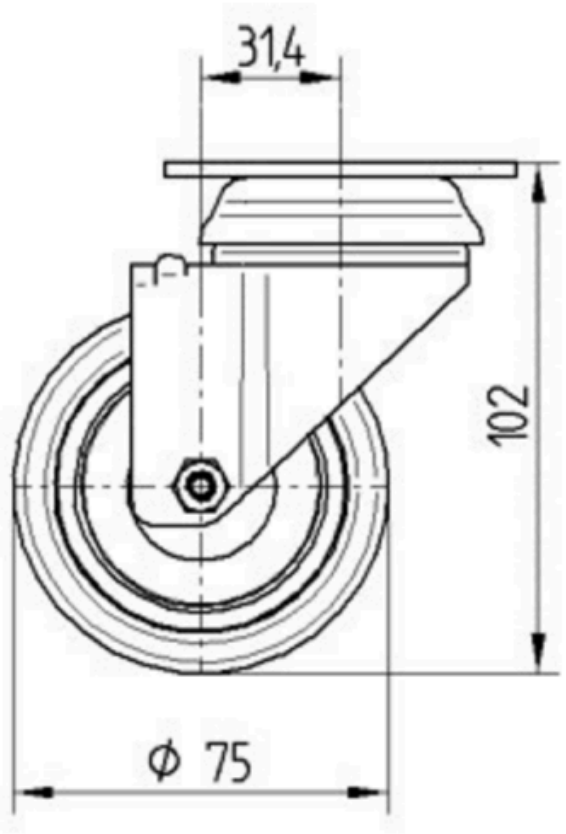

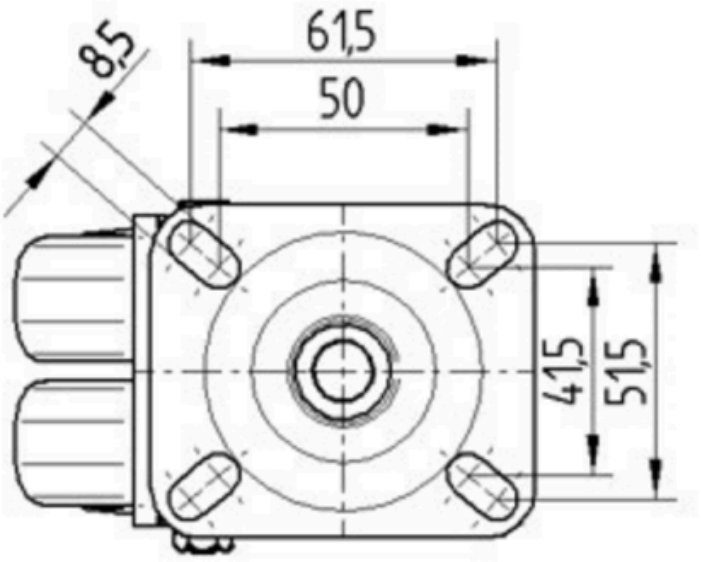

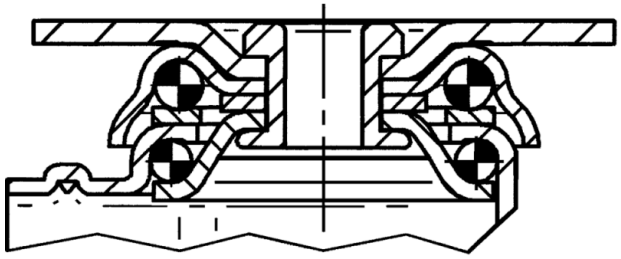

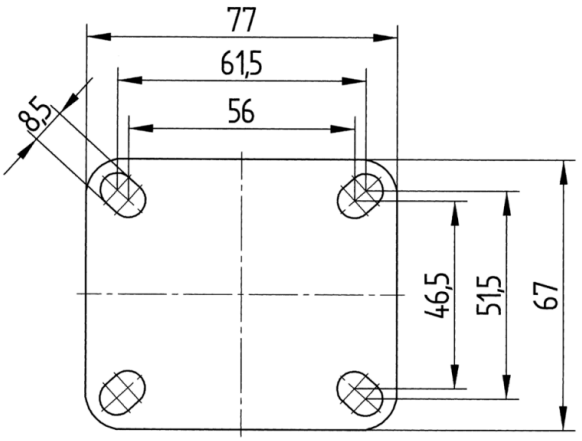

© Copyright 2026 TENTE International GmbH