PRODUCT INFORMATION

DELTA

3642ITP200P63 f.d-lock

EAN 4031582337433



Image may differ from the original product

PERFORMANCE

Roll Performance	●●●○○
Movement Noise	●●●○○
Attrition	●●●●○
Corrosion Resistance	●●●○○

CORE ATTRIBUTES

Product Name	Delta
Type	Swivel castor with total lock, head end of castor
Standard	EN12532 - Transport Equipment
Load capacity at 4 km/h	600 kg
Load capacity at 6 km/h	480 kg
Electric Conductive	No
Stainless	No
Load capacity Static	1200 kg
Temperature range (Minimum)	-10 °C
Temperature range (Maximum)	60 °C
Overall Height	250 mm
Overall width	94 mm
Overall weight	3.63 kg

HOUSING

Housing Material	Steel sheet, heavy
Fork shape	Broad, reinforced
Swivel Bearing	Precision ball bearing
Housing Color	Blue passivated
Offset	55 mm
Swivel radius	155 mm
Swivel interference	310 mm
Dome diameter	94 mm

WHEEL

Body material	Aluminium
Tread Material Mix	Polyurethane, casted
Bearing	Precision ball bearing
Axle	Screwed with nut
Wheel Color	Honey yellow (RAL1005)
Threadguards	Without threadguard
Diameter	200 mm
Tread width	50 mm
Body width	50 mm
Hardness of tread (A)	92 Shore A
Hardness of tread (D)	42 Shore D

FITTING

Fitting type	Medium rectangular plate
Plate length	137 mm
Plate width	105 mm
Plate hole length (Minimum)	75 mm
Plate hole length (Maximum)	80 mm
Plate hole width (Minimum)	105 mm
Plate hole width (Maximum)	105 mm
Plate hole diameter	11 mm

© Copyright 2026 TENTE International GmbH

DELTA

3642ITP200P63 f.d-lock

EAN 4031582337433

Order number 00833704

Product Drawings

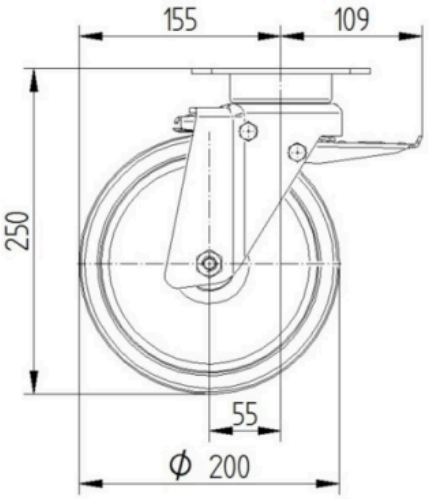

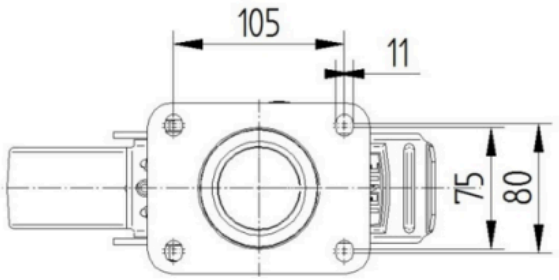

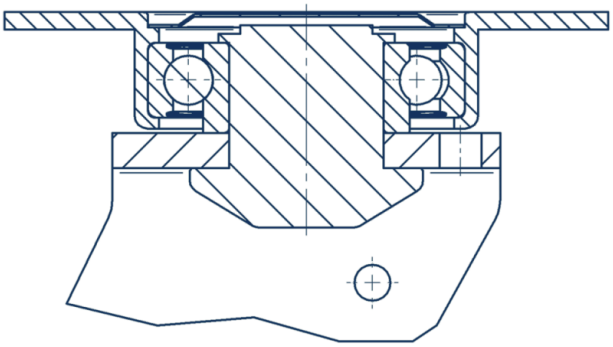

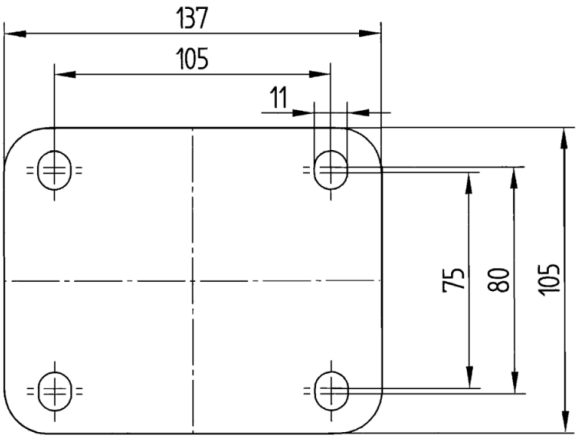

© Copyright 2026 TENTE International GmbH