PRODUCT INFORMATION

ALPHA

3470UVH080P62

EAN 4031582304725

BETTER MOBILITY. BETTER LIFE.



Image may differ from the original product

PERFORMANCE

Roll Performance	●●●○○
Movement noise	●●●○○
Attrition	●●●○○
Corrosion resistance	●●●○○

CORE ATTRIBUTES

Product name	Alpha
Type	Swivel caster
Standard	EN12532 - Transport Equipment
Load capacity at 2.5 mph	220.46 lb
Electric conductive	no
Stainless	no
Load capacity Static	440.92 lb
Temperature range (Minimum)	-4 °F
Temperature range (Maximum)	176 °F
Overall height	4.25 in
Overall width	2.95 in
Overall weight	1.6 lb

HOUSING

Housing Material	Steel sheet, heavy
Fork shape	Broad
Swivel bearing	Two ball races
Housing Color	Blue passivated
Offset	1.57 in
Swivel radius	3.15 in
Swivel interference	6.3 in
Dome diameter	2.95 in

WHEEL

Body material	Polyamide
Tread material	Solid rubber, black
Bearing	Plain bearing
Axle	Screwed with nut
Wheel color	Graphite black (RAL9011)
Threadguards	With threadguard
Diameter	3.15 in
Tread width	1.38 in
Body width	1.38 in
Hardness of tread (A)	90 Shore A
Hardness of tread (D)	39 Shore D

FITTING

Fitting type	Rectangular plate
Plate length	4.13 in
Plate width	3.15 in
Plate hole length (Minimum)	3.03 in
Plate hole length (Maximum)	2.36 in
Plate hole width (Minimum)	3.03 in
Plate hole width (Maximum)	3.15 in
Plate hole diameter	0.35 in

© Copyright 2026 TENTE International GmbH

ALPHA

3470UVH080P62

EAN 4031582304725

Order number 00001196

Product Drawings

3470U00080P62-neu

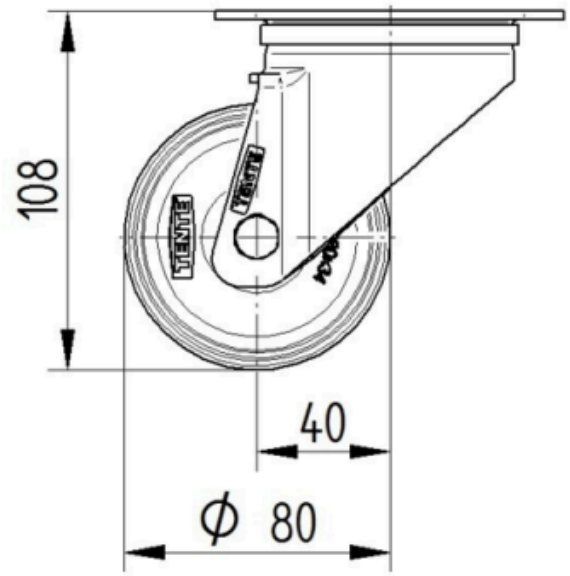

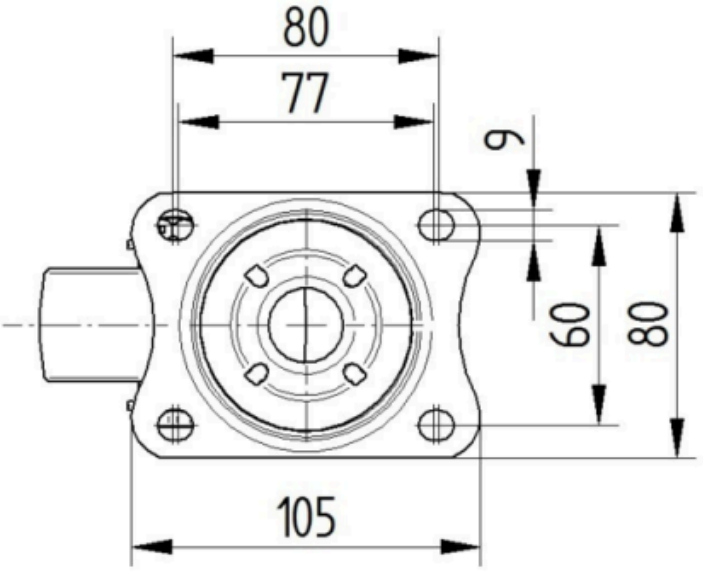

Platte 3470-080P62-105x80

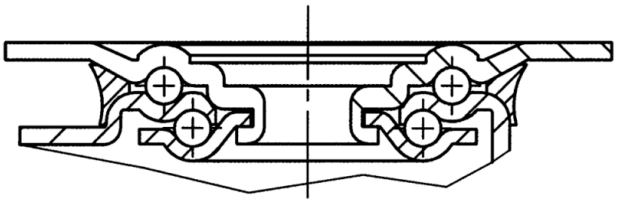

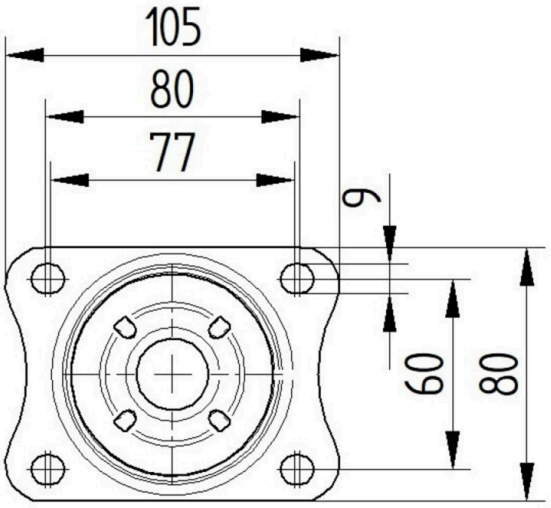

© Copyright 2026 TENTE International GmbH