PRODUCT INFORMATION

CHANGE LEVER

Schalthebel 65S45 m. Gew. Stift

EAN 4031582322118



Image may differ from the original product

PERFORMANCE

Corrosion Resistance	●●●○○

CORE ATTRIBUTES

Product Name	Change lever
Type	Accessory
Electric Conductive	No
Stainless	No
Overall weight	0.09 kg

© Copyright 2026 TENTE International GmbH

CHANGE LEVER

Schalthebel 65S45 m. Gew. Stift

EAN 4031582322118

Order number 00008215

Product Drawings

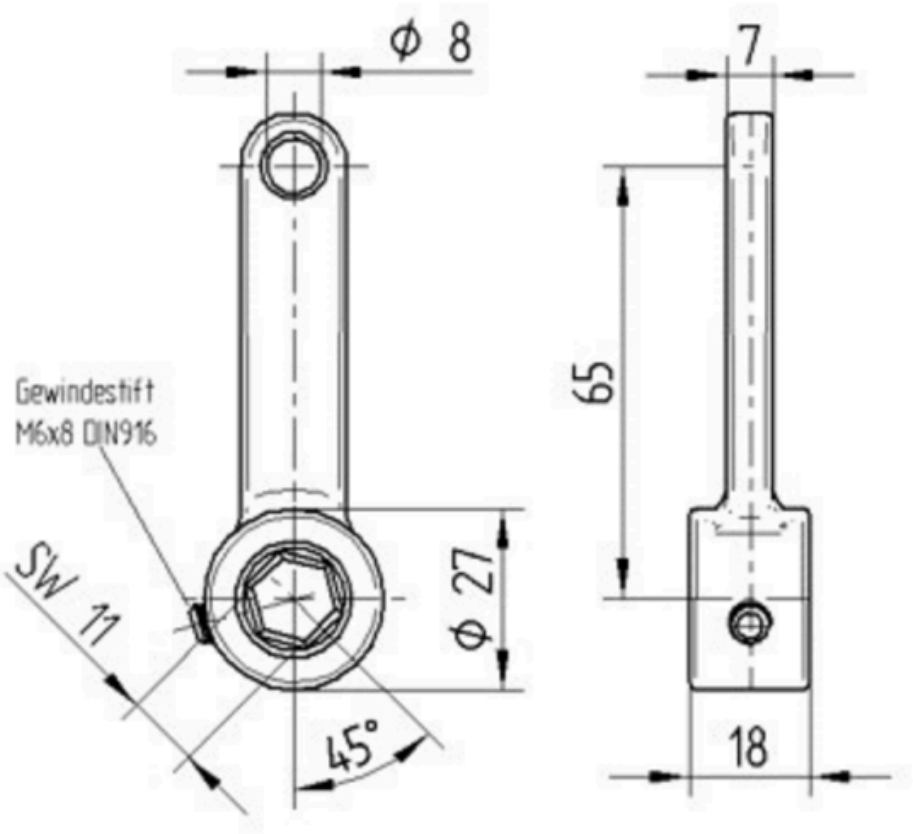

© Copyright 2026 TENTE International GmbH