PRODUCT INFORMATION

PURETECH

PVR 125x37-Ø12 HL44

EAN 4031582321265

BETTER MOBILITY. BETTER LIFE.



Image may differ from the original product

WHEEL

Body material	Polypropylene
Tread material	Solid rubber, black
Bearing	Roller bearing
Wheel color	Graphite black (RAL9011)
Threadguards	Without threadguard
Diameter	4.92 in
Tread width	1.46 in
Axle hole diameter	0.47 in
Hub length	1.73 in
Body width	1.46 in
Hardness of tread (A)	80 Shore A

PERFORMANCE

Roll Performance	●●●○○
Movement noise	●●●●○
Attrition	●●●○○
Corrosion resistance	●●●○○

CORE ATTRIBUTES

Product name	Puretech
Type	Wheel
Standard	EN12532 - Transport Equipment
Load capacity at 2.5 mph	220.46 lb
Electric conductive	no
Stainless	no
Load capacity Static	440.92 lb
Temperature range (Minimum)	-4 °F
Temperature range (Maximum)	140 °F
Overall weight	1.03 lb

© Copyright 2026 TENTE International GmbH

PURETECH

PVR 125x37-Ø12 HL44

EAN 4031582321265

Order number 00030955

Product Drawings

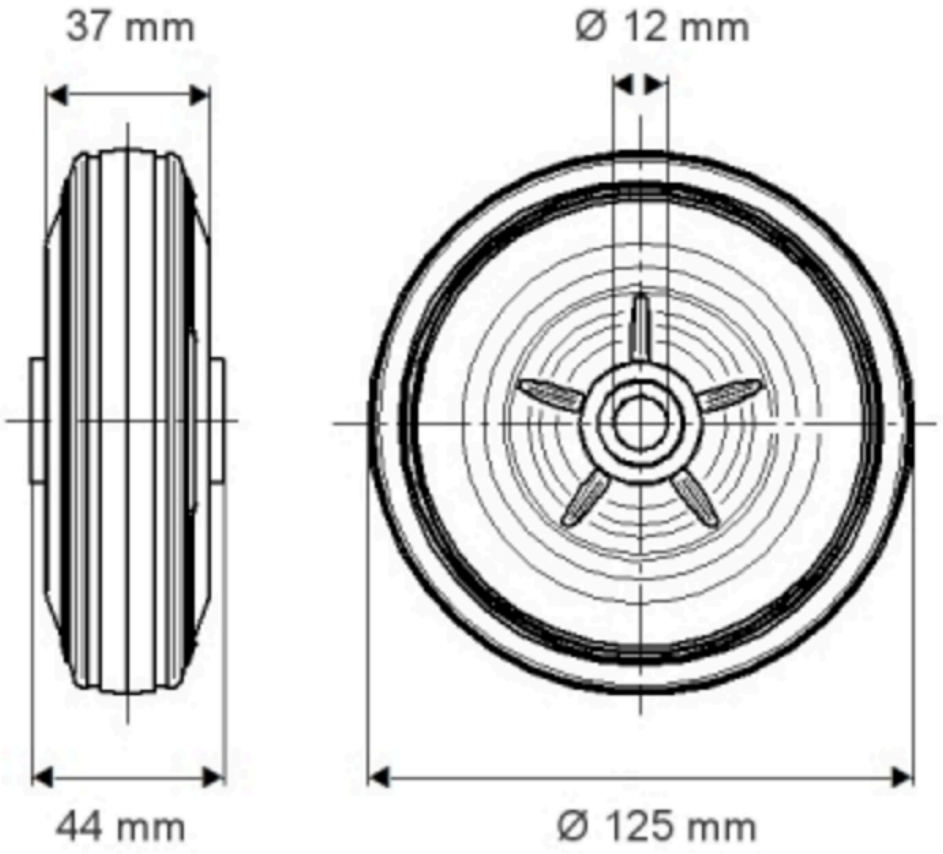

© Copyright 2026 TENTE International GmbH