PRODUCT INFORMATION

INTEGRAL TWIN

2944UAP150R36-32S30 D 9002 4xM6

EAN 4031582302578



Image may differ from the original product

PERFORMANCE

Roll Performance	●●●●●
Movement noise	●●●○○
Attrition	●●●●○
Corrosion resistance	●●●○○

CORE ATTRIBUTES

Product name	Integral twin
Type	Swivel caster with central, total or directional lock
Standard	EN12531 - Hospital Bed Castors
Load capacity at 1.8 mph	330.69 lb
Load capacity at 2.5 mph	330.69 lb
Electric conductive	no
Stainless	no
Load capacity Static	992.08 lb
Temperature range (Minimum)	-13 °F
Temperature range (Maximum)	176 °F
Overall height	6.89 in
Overall width	2.95 in
Overall weight	3.13 lb
Certification	Tested and monitored by TÜV Süd

HOUSING

Housing Material	Steel sheet, medium
Fork shape	Twin wheel housing
Swivel bearing	Precision ball bearing
Housing Color	Gray white (RAL9002)
Offset	1.77 in
Swivel radius	4.88 in
Swivel interference	9.76 in
Dome diameter	2.76 in

WHEEL

Body material	Polyamide
Tread material	Polyurethane, injected
Bearing	Precision ball bearing
Wheel color	Gray white (RAL9002)
Threadguards	With threadguard
Diameter	5.91 in
Tread width	0.59 in
Body width	0.59 in
Hardness of tread (A)	92 Shore A
Hardness of tread (D)	42 Shore D

FITTING

Brake cam	Hex cam
Fitting type	Stem with cam hole for profile bars, short version
Bolt diameter	1.26 in
Bolt length	2.01 in
Bolt thread position	0.28 in
Bolt mounting holes quantity	4

German Design Award

Red Dot Design Award

© Copyright 2026 TENTE International GmbH

INTEGRAL TWIN

2944UAP150R36-32S30 D 9002 4xM6

EAN 4031582302578

Order number 00032831

Product Drawings

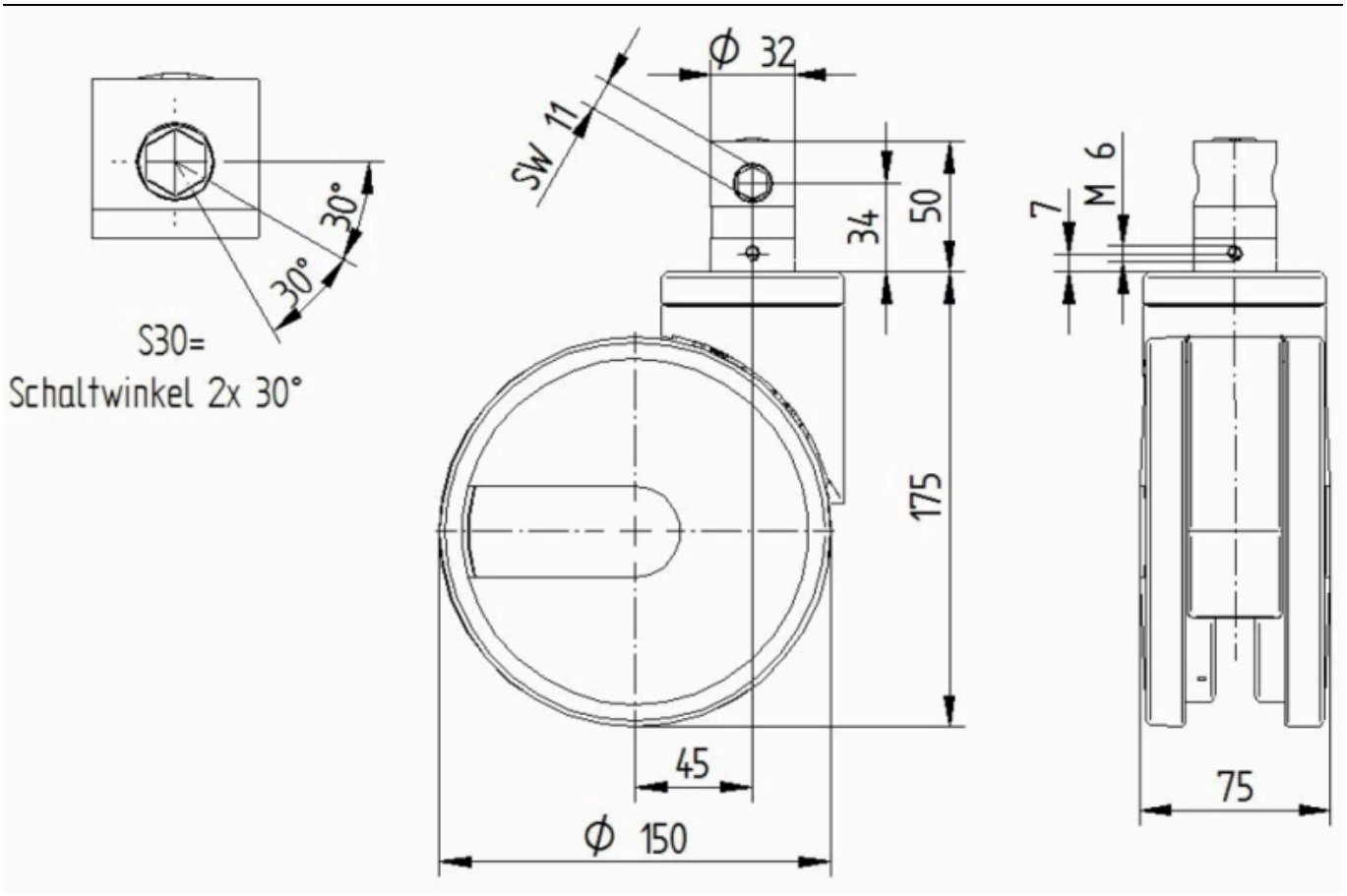

German Design Award

Red Dot Design Award

© Copyright 2026 TENTE International GmbH