PRODUCT INFORMATION

MAXTECH

PALANCA TRANSMISION 28mm S45

EAN 4031582456387



Image may differ from the original product

PERFORMANCE

Corrosion Resistance	●●●○○

CORE ATTRIBUTES

Product Name	Maxtech
Type	Accessory
Electric Conductive	No
Stainless	No
Overall weight	0.06 kg

© Copyright 2026 TENTE International GmbH

MAXTECH

PALANCA TRANSMISION 28mm S45

EAN 4031582456387

BETTER MOBILITY. BETTER LIFE.

Product Drawings

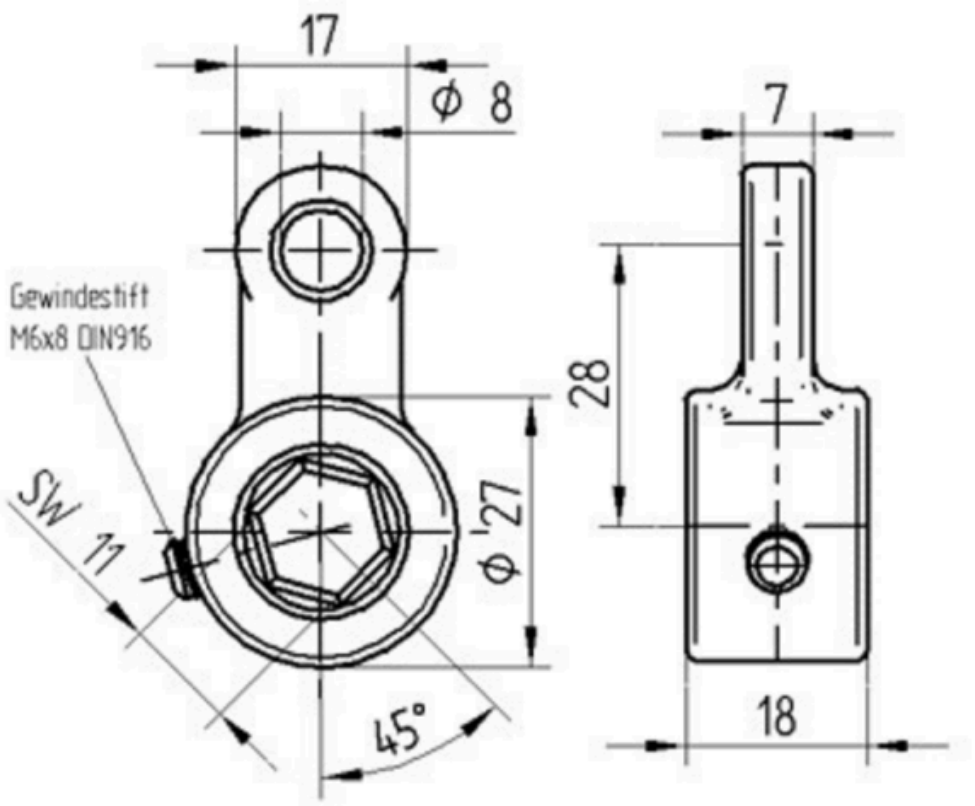

© Copyright 2026 TENTE International GmbH