PRODUCT INFORMATION

ZETA REVERSE

468BIEP200P63

EAN 4031582398083

BETTER MOBILITY. BETTER LIFE.



Image may differ from the original product

PERFORMANCE

Roll Performance	●●●●○
Movement noise	●●●●●
Attrition	●●●○○
Corrosion resistance	●●●○○

CORE ATTRIBUTES

Product name	Zeta reverse
Type	Swivel caster with total lock and spring loaded directional lock
Standard	EN12532 - Transport Equipment
Load capacity at 2.5 mph	992.08 lb
Load capacity at 3.7 mph	793.66 lb
Electric conductive	no
Stainless	no
Load capacity Static	1984.16 lb
Temperature range (Minimum)	-4 °F
Temperature range (Maximum)	185 °F
Overall height	9.45 in
Overall width	3.78 in
Overall weight	9.41 lb

HOUSING

Housing Material	Steel sheet, very heavy
Fork shape	Broad, reinforced
Swivel bearing	Two ball races, reinforced or stainless
Housing Color	Blue passivated
Offset	2.17 in
Swivel interference	14.17 in
Dome diameter	3.78 in

WHEEL

Tread hardness	soft
Body material	Aluminum
Tread material	Elastic tire, black, vulcanized
Bearing	Precision ball bearing
Axle	Screwed with nut
Wheel color	Jet black (similar RAL9005)
Threadguards	Without threadguard
Diameter	7.87 in
Tread width	1.97 in
Body width	1.97 in
Hardness of tread (A)	67 Shore A

FITTING

Fitting type	Rectangular plate
Plate length	5.39 in
Plate width	4.13 in
Plate hole length (Minimum)	2.95 in
Plate hole length (Maximum)	3.15 in
Plate hole width (Minimum)	2.95 in
Plate hole width (Maximum)	4.13 in
Plate hole diameter	0.43 in

© Copyright 2026 TENTE International GmbH

ZETA REVERSE

468BIEP200P63

EAN 4031582398083

Order number 00860822

Product Drawings

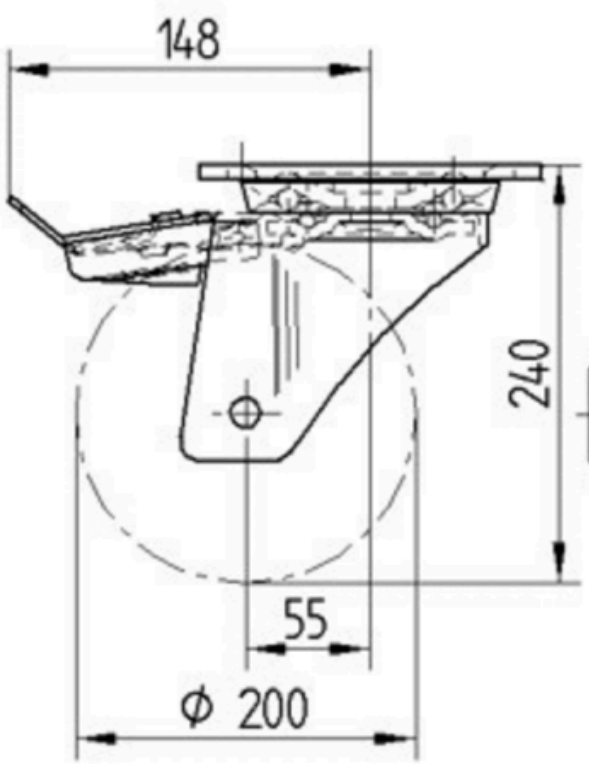

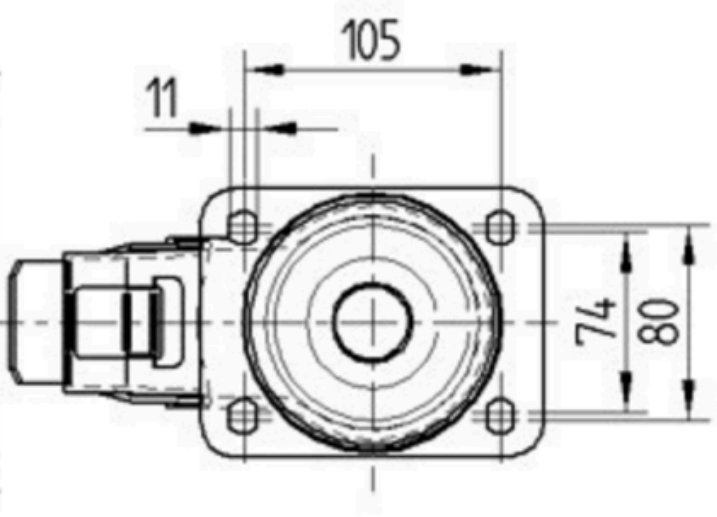

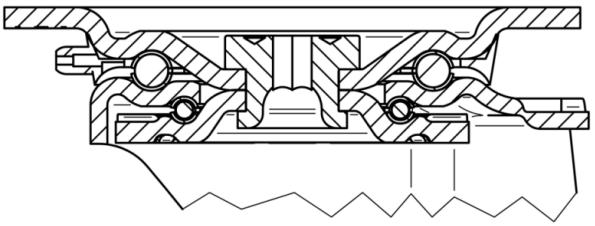

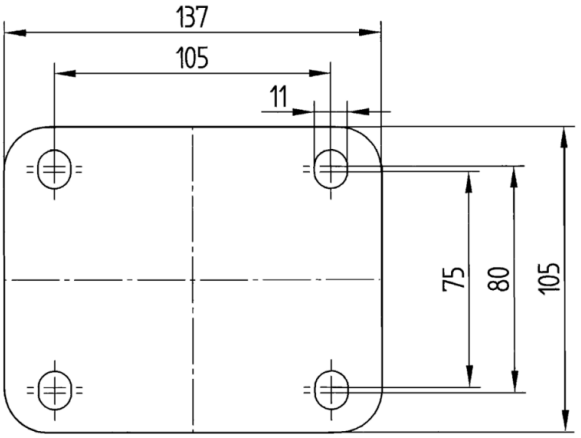

© Copyright 2026 TENTE International GmbH